Multiport

by MP Filtri Technology

Maximum pressure 80 bar

Flow rates to 200 l/min

MP FILTRI spa

LMP 110

Maximum pressure 80 bar

Flow rates to 160 l/min

Technical data

LMP 110

Filter housing (Materials)

- Head: Aluminium
- Housing: Cataphoresis painting
- Bypass valve: Brass/Aluminium

Pressure

LMP 110 length: 1 - 2 - 3 - 4

- Working pressure: 80 bar (8 MPa)
- Test pressure: 120 bar (12 MPa)
- Burst pressure: 290 bar (29 MPa)
- Pulse pressure fatigue test: 1.000.000 cycles with pressure from 0 to 80 bar (8 MPa)

Temperature

- From -25°C to +110°C

Bypass valve

- Opening pressure 3.5 bar ±10%
- Other opening pressures on request.

Δp Elements type

- Series N and W elements: 20 bar
- Oil flow from exterior to interior.

Seals

- Standard NBR series A
- Optional FPM series V

Weights (kg)

Length	
• LMP110 - 1	1,6
• LMP110 - 2	1,8
• LMP110 - 3	2,1
• LMP110 - 4	2,6

Volumes (dm^3)

Length	
• LMP110 - 1	0,75
• LMP110 - 2	0,81
• LMP110 - 3	1,11
• LMP110 - 4	1,53

Connections

- Inlet/Outlet in Line LMP 110
- Inlet/Outlet in Line + second inlet port 90° LMP 112
- Inlet/Outlet in Line + second outlet port 90° LMP 116
- Inlet/Outlet in Line + outlet bypass port 90° LMP 118

Compatibility

- Housings compatible with: Mineral oils to ISO 2943 - aqueous emulsions synthetic fluids, water and glycol.
- The filter elements are compatible with: Mineral oils to ISO 2943, Synthetic fluids Aqueous emulsions, water and glycol (series W required).
- NBR seals series A, compatible with: Mineral oils to ISO 2943 - aqueous emulsions synthetic fluids, water and glycol.
- V series FPM seals, compatible with: Synthetic fluids type HS-HFDR-HFDS-HFDU To ISO 2943

Filter Element Area

Filter element in stainless steel mesh

Type	Length 1	2	3	4
CU 110	1302	1764	2464	3864
	Values expressed in **cm^2**			

LMP 110

Style
LMP 110

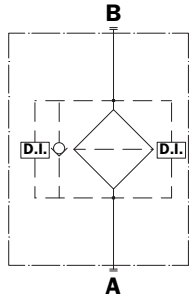

LMP 118

Style
LMP 118

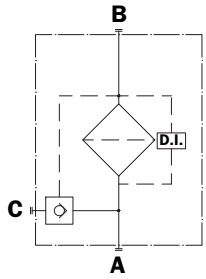

Filter housings Δp pressure drop

The curves are plotted utilising mineral oil with density of 0.86 kg/dm^3 to ISO 3968.

Δp varies proportionally with density.

LMP 110 - Δp Housing

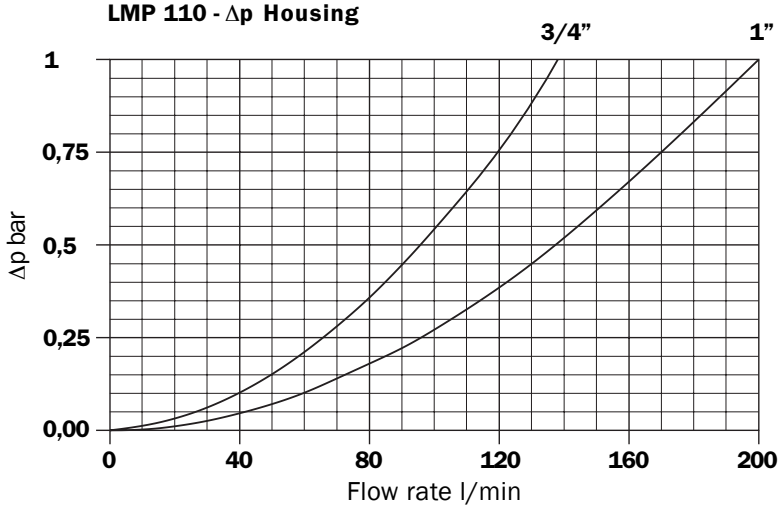

LMP 112

LMP 112
(plug not included)

LMP 116
(plug not included)

LMP 112 - Δp Housing

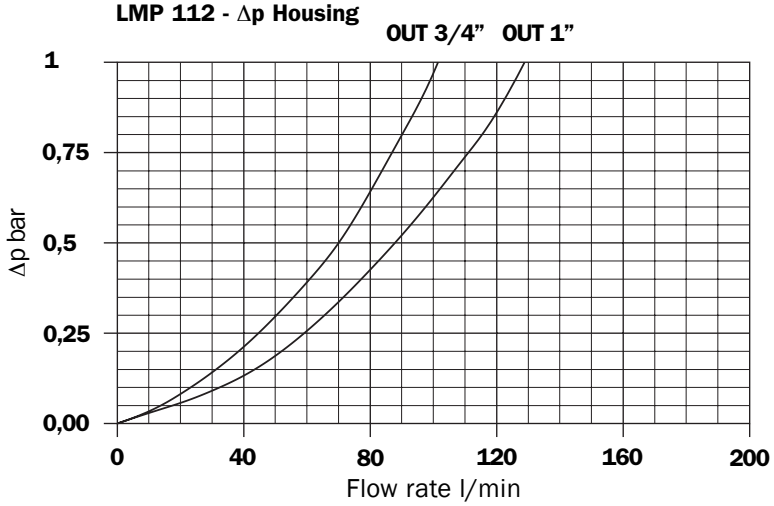

Style
LMP 112

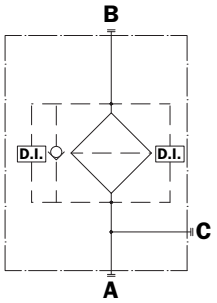

Style
LMP 112

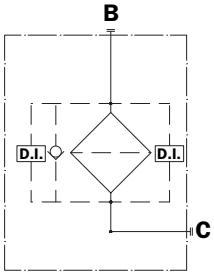

LMP 116 - Δp Housings

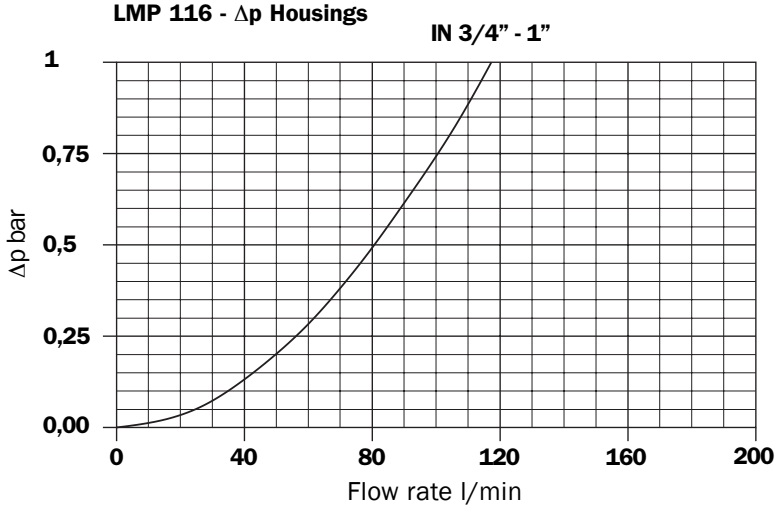

Style
LMP 116

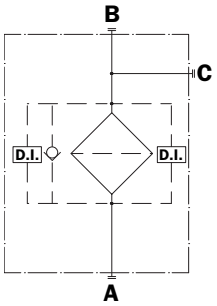

Valves
Bypass valve pressure drop
LMP 110 - LMP 112 - LMP 116

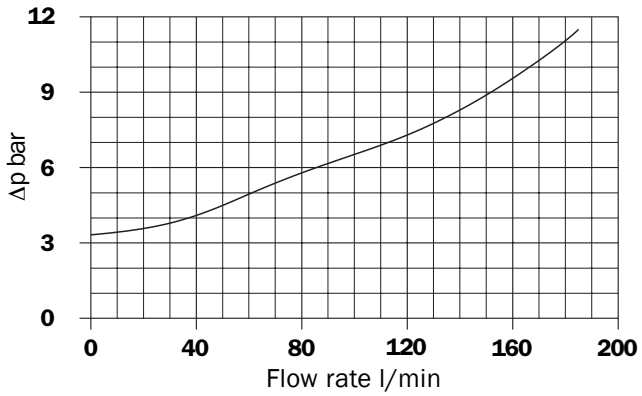

Valves
Bypass valve pressure drop
LMP 118

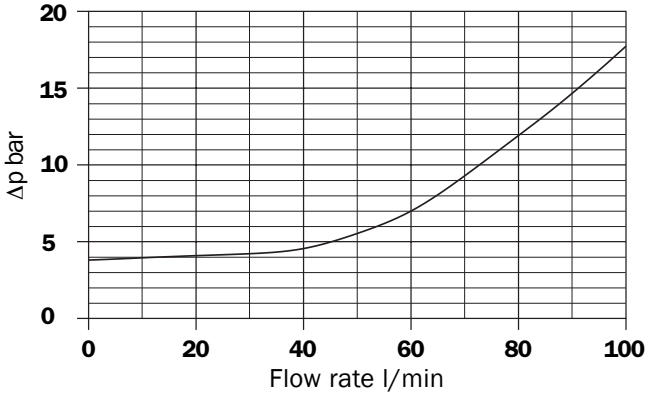

Filter Sizing

Correct sizing of the filter must be based on a variable pressure drop depending on the application:

- return filter — Δp from 0.4 to 0.6 bar
- filter on lubrication lines — Δp from 0.3 to 0.5 bar
- off-line fluid power plants — Δp from 0.3 to 0.4 bar
- off-line filter test benches — Δp from 0.1 to 0.3 bar
- over-boost filter — Δp from 0.4 to 0.6 bar

The pressure drop calculation is performed by adding together the value for the housing and the value for the filter element.
The pressure drop in the housing is proportional to the fluid density kg/dm^3; all the graphs in the catalogue are referred to mineral oil with density of 0.86 kg/dm^3.
The filter element pressure drop value is proportional to viscosity mm^2/s, the Y values in the catalogue are referred to viscosity of 30 mm^2/s.

Sizing data for single cartridge, head at top

Δp Tot.
Δpc Filter housing
Δpe Filter element
Y Multiplication factor (see below)
Q l/min = flow rate
V1 = reference viscosity 30 mm^2/s (cSt)
V2 = operating viscosity in mm^2/s (cSt)
Δp Tot. = Δpc + Δpe
Δpe = Y : 1000 x Q x (V2/V1)

Multiplication factor "Y" for definition of the pressure drop of filter elements.

Reference viscosity 30 mm$^{2/s}$

Filter Element	Absolute Filtration Series N					Nominal Filtration Series N		Nominal Filtration Series N
Type	**A 0 3**	**A 0 6**	**A 1 0**	**A 1 6**	**A 2 5**	**P 1 0**	**P 2 5**	**M 2 5**
CU 110 1	16,25	15,16	8,754	8,142	5,875	2,862	2,651	0,1431
2	12,62	10,44	6,111	6,024	4,155	1,598	1,486	0,1253
3	8,571	7,951	5,066	4,066	2,397	1,242	1,153	0,1067
4	5,759	4,051	2,798	2,358	1,142	0,9072	0,8491	0,0558

Dimensions

LMP 110

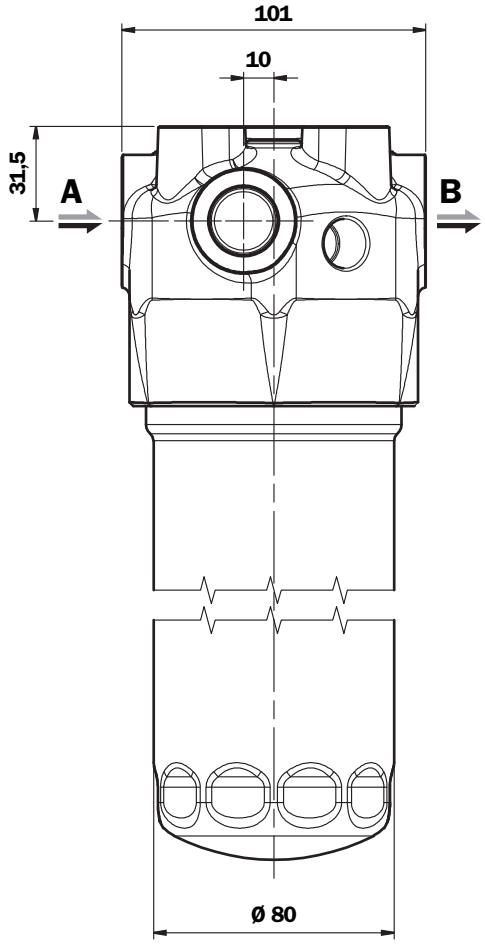

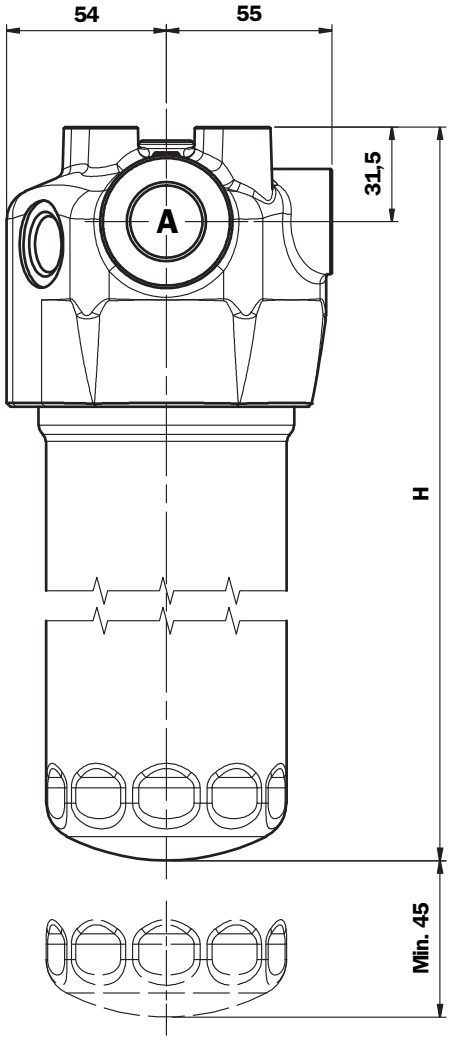

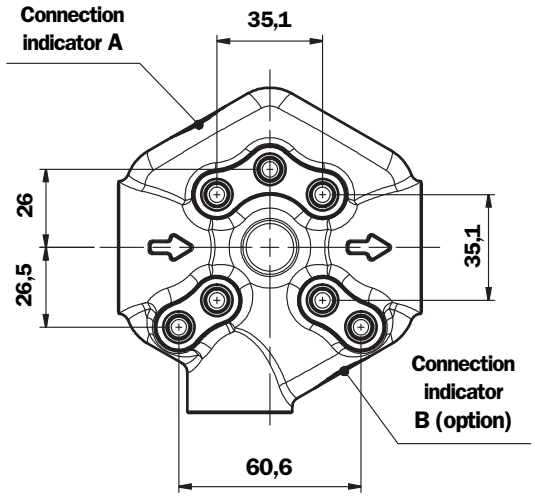

Length Filter	H mm
1	182
2	215
3	265
4	365

Filter fixing holes LMP 110 - 112 - 116 - 118

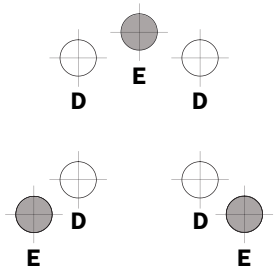

Double filter fixing holes

D	3/8” UNC x Depth 12 mm
E	M10 x Depth 12 mm

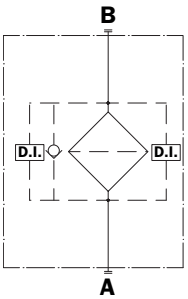

	Connections A - B
A	G 3/4”
B	G 1”
C	3/4” NPT
D	1” NPT
E	SAE 12
F	SAE 16

LMP 112

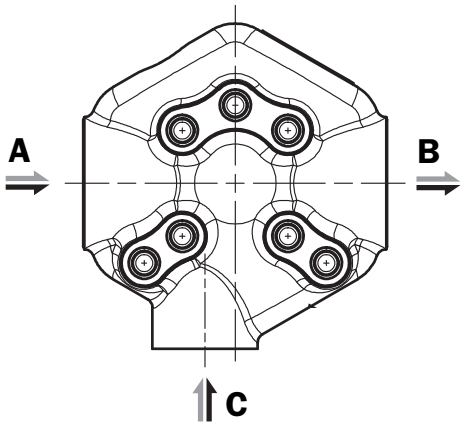

LMP 116

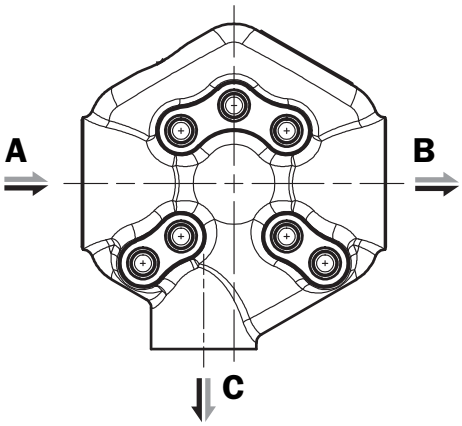

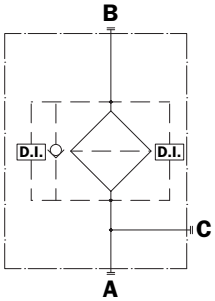

	Connections A - B	Lateral connections C
A	G 3/4”	G 3/4”
B	G 1”	G 3/4”
C	3/4” NPT	3/4” NPT
D	1” NPT	3/4” NPT
E	SAE 12	SAE 12
F	SAE 16	SAE 12

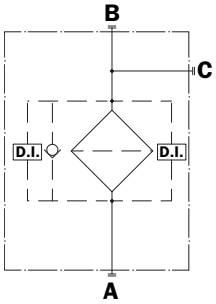

LMP 118

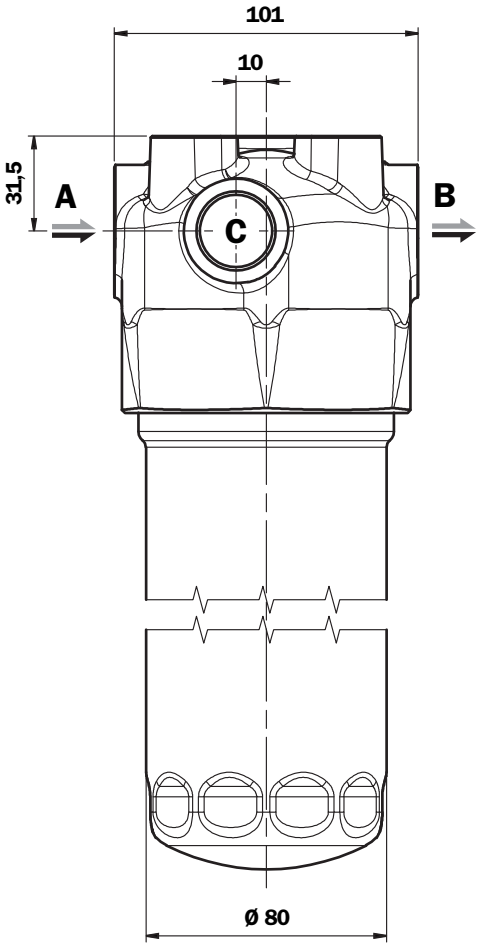

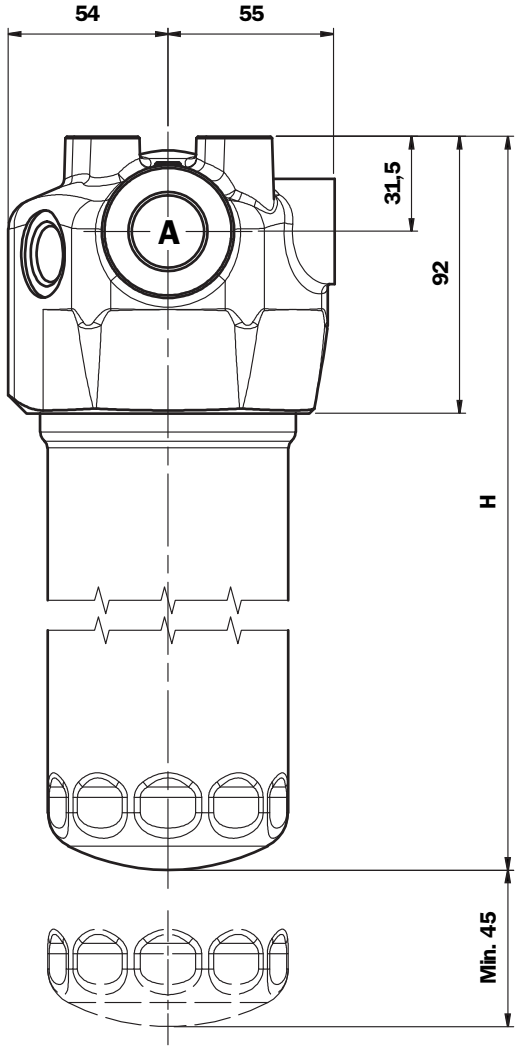

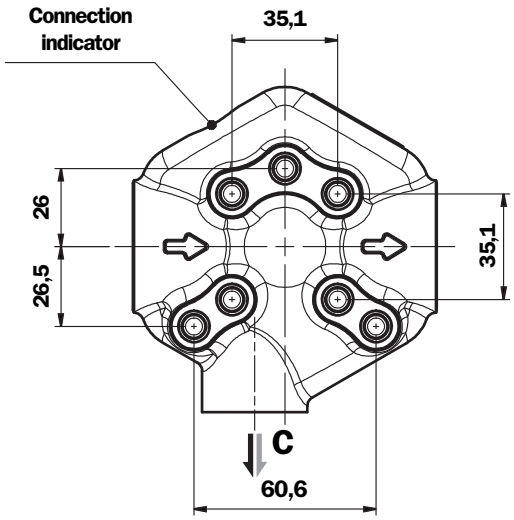

Length Filter	H mm
1	182
2	215
3	265
4	365

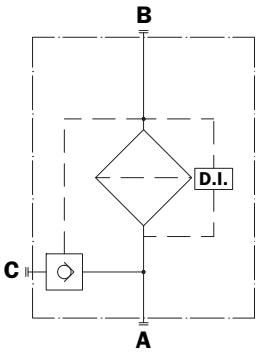

	Connections A - B	Lateral connections C
A	G 3/4”	G 3/4”
B	G 1”	G 3/4”
C	3/4” NPT	3/4” NPT
D	1” NPT	3/4” NPT
E	SAE 12	SAE 12
F	SAE 16	SAE 12

Ordering information LMP110-118

Filter assembly
LMP

	1	2	3	4	5	6	7	8	9
	☐	☐	☐	☐	☐	☐	☐	☐	☐
Example: LMP	**110**	**2**	**B**	**A**	**B**	**3**	**A10**	**N**	**P01**

Filter element
CU 110

	2	7	4	8	9
	☐	☐	☐	☐	☐
Example: CU110	**2**	**A10**	**A**	**N**	**P01**

1 - Style

110	
112	
116	
118	

2 - Filter length

1	
2	
3	
4	

3 - Valves

S	Without bypass valve (excluded LMP 118)
B	With bypass valve Opening pressure: 3,5 bar
	With bypass valve Opening pressure: on request

4 - Seals

A	NBR
	On request

5 - Connection

Type	
A	G 3/4"
B	G 1"
C	3/4" NPT
D	1" NPT
E	SAE 12
F	SAE 16

6 - Indicator port

1	No
2	A
3	B (excluded LMP 118)
6	A + B (excluded LMP 118)

7 - Filter element

A03	3 µm	Absolute filtration Inorganic microfibre ßx (c) ≥ 1000
A06	6 µm	
A10	10 µm	
A16	16 µm	
A25	25 µm	
M25	25 µm	Nominal Filtration Metal mesh
M60	60 µm	
P10	10 µm	Nominal Filtration Cellulose
P25	25 µm	

8 - Collapse pressure

N	Δp 20 bar

9 - Options

P01	MP Filtri standard
Pxx	Customer request

LMP 120

Maximum pressure 80 bar

Flow rates to 200 l/min

Technical data

LMP 120

Filter housing (Materials)

- Head: Aluminium
- Housing: Cataphoresis painting
- Bypass valve: Brass/Aluminium

Pressure

LMP 120/122/123 length: 1 - 2 - 3 - 4

- Working pressure: 80 bar (8 MPa)
- Test pressure: 120 bar (12 MPa)
- Burst pressure: 380 bar (38 MPa)
- Pulse pressure fatigue test: 1.000.000 cycles with pressure from 0 to 80 bar (8 MPa)

Temperature

- From -25°C to +110°C

Bypass valve

- Opening pressure 3.5 bar ±10%
- Other opening pressures on request.

Δp Elements type

- Series N and W elements: 20 bar
- Oil flow from exterior to interior.

Seals

- Standard NBR series A
- Optional FPM series V

Weights (kg)

Length	
• LMP120 - 1	1,9
• LMP120 - 2	2,1
• LMP120 - 3	2,4
• LMP120 - 4	2,9

Volumes (dm^3)

Length	
• LMP120 - 1	0,75
• LMP120 - 2	0,81
• LMP120 - 3	1,11
• LMP120 - 4	1,53

Compatibility

- Housings compatible with:
  Mineral oils to ISO 2943 - aqueous emulsions synthetic fluids, water and glycol.
- The filter elements are compatible with:
  Mineral oils to ISO 2943, Synthetic fluids Aqueous emulsions, water and glycol (series W required).
- NBR seals series A, compatible with:
  Mineral oils to ISO 2943 - aqueous emulsions synthetic fluids, water and glycol.
- V series FPM seals, compatible with:
  Synthetic fluids type HS-HFDR-HFDS-HFDU To ISO 2943

Filter Element Area

Filter element in stainless steel mesh

Type	Length 1	2	3	4
CU 110	1302	1764	2464	3864
	Values expressed in **cm^2**			

LMP 120

LMP 122

Style
LMP 120

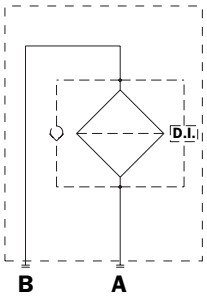

Style
LMP 122

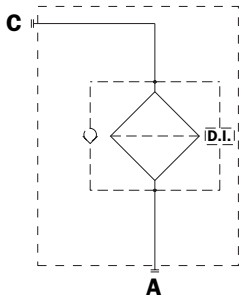

Filter housings Δp pressure drop

The curves are plotted utilising mineral oil with density of 0.86 kg/dm^3 to ISO 3968.

Δp varies proportionally with density.

LMP 120/122 - Δp Housing

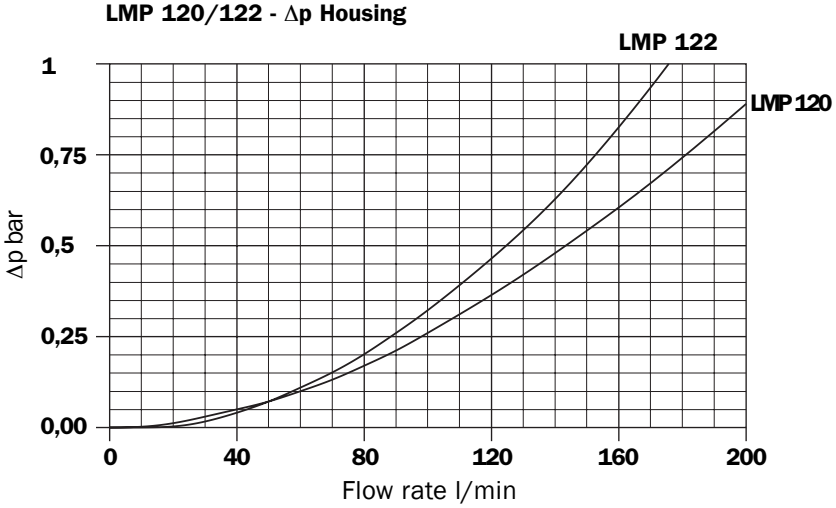

LMP 123
Type 1

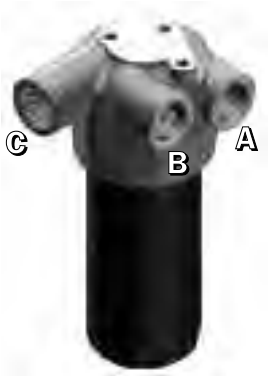

LMP 123
Type 2

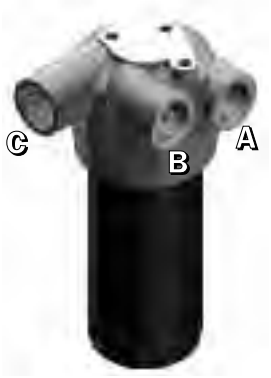

Style
LMP 123
Type 1

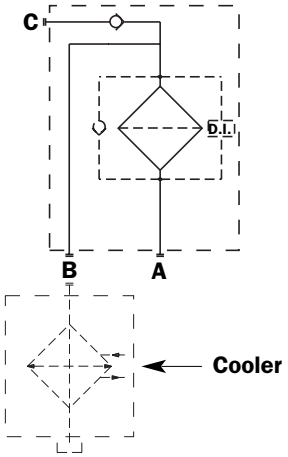

Style
LMP 123
Type 2

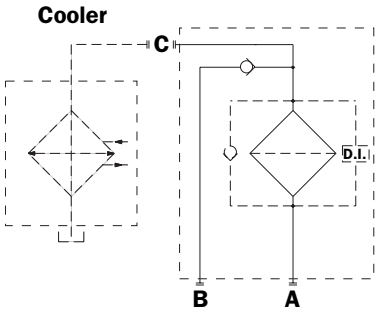

Filter housings Δp pressure drop

The curves are plotted utilising mineral oil with density of 0.86 kg/dm³ to ISO 3968.

Δp varies proportionally with density.

LMP 123 - Δp

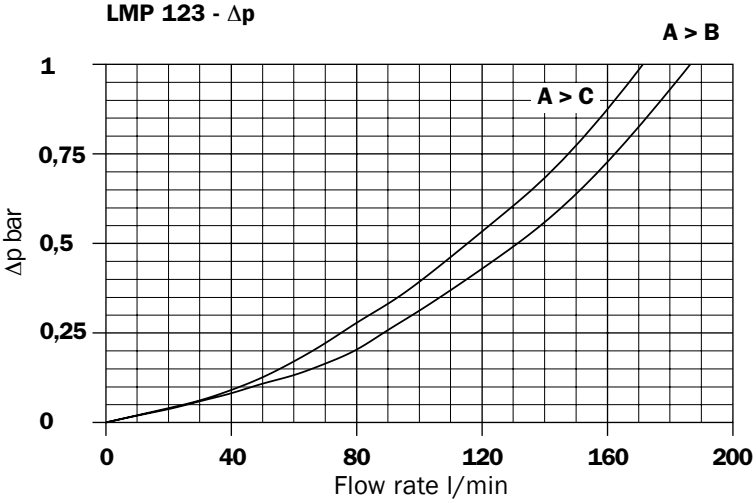

LMP 123 - Δp Housing with check valve 2 bar setting

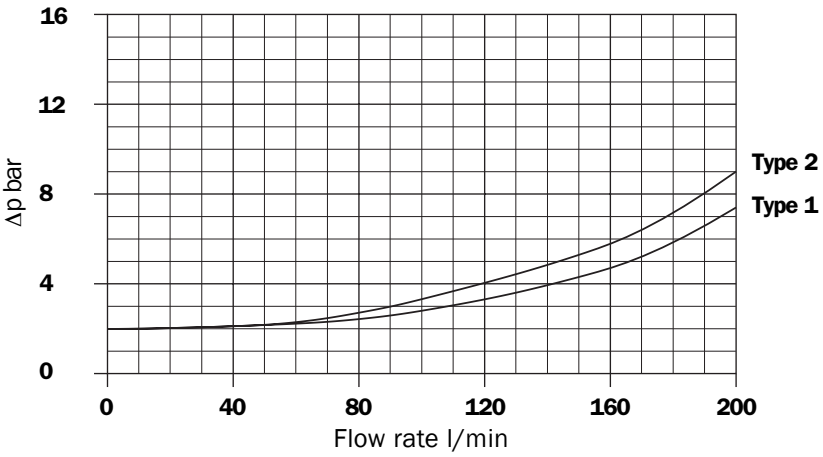

Valves
Bypass valve pressure drop
LMP 120/LMP 123

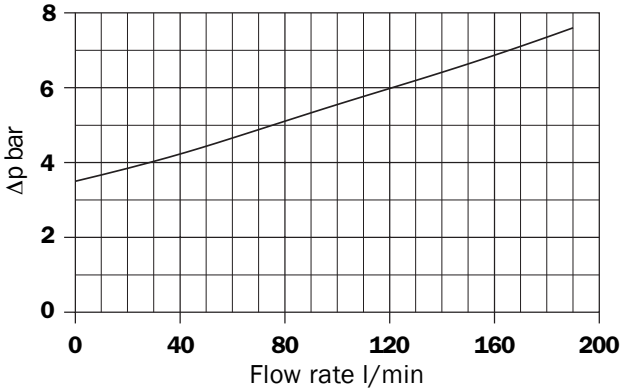

LMP 123 - Δp Housing with check valve 3 bar setting

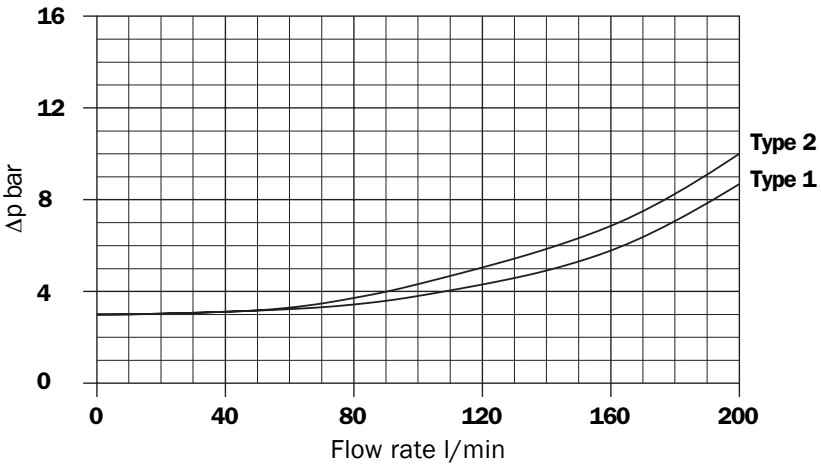

Filter sizing

Correct sizing of the filter must be based on a variable pressure drop depending on the application:

- return filter — Δp from 0.4 to 0.6 bar
- filter on lubrication lines — Δp from 0.3 to 0.5 bar
- off-line fluid power plants — Δp from 0.3 to 0.4 bar
- off-line filter test benches — Δp from 0.1 to 0.3 bar
- over-boost filter — Δp from 0.4 to 0.6 bar

The pressure drop calculation is performed by adding together the value for the housing and the value for the filter element.
The pressure drop in the housing is proportional to the fluid density kg/dm^3; all the graphs in the catalogue are referred to mineral oil with density of 0.86 kg/dm^3.
The filter element pressure drop value is proportional to viscosity mm^2/s, the Y values in the catalogue are referred to viscosity of 30 mm^2/s.

Sizing data for single cartridge, head at top

Δp Tot.
Δpc Filter housing
Δpe Filter element
Y Multiplication factor (see below)
Q l/min = flow rate
V1 = reference viscosity 30 mm^2/s (cSt)
V2 = operating viscosity in mm^2/s (cSt)
Δp Tot. = Δpc + Δpe
Δpe = Y : 1000 x Q x (V2/V1)

Multiplication factor "Y" for definition of the pressure drop of filter elements.

Reference viscosity 30 mm$^{2/s}$

Filter Element	Absolute Filtration Series N					Nominal Filtration Series N		Nominal Filtration Series N
Type	A 0 3	A 0 6	A 1 0	A 1 6	A 2 5	P 1 0	P 2 5	M 2 5
CU 110 1	16,25	15,16	8,754	8,142	5,875	2,862	2,651	0,1431
2	12,62	10,44	6,111	6,024	4,155	1,598	1,486	0,1253
3	8,571	7,951	5,066	4,066	2,397	1,242	1,153	0,1067
4	5,759	4,051	2,798	2,358	1,142	0,9072	0,8491	0,0558

Dimensions

LMP 120

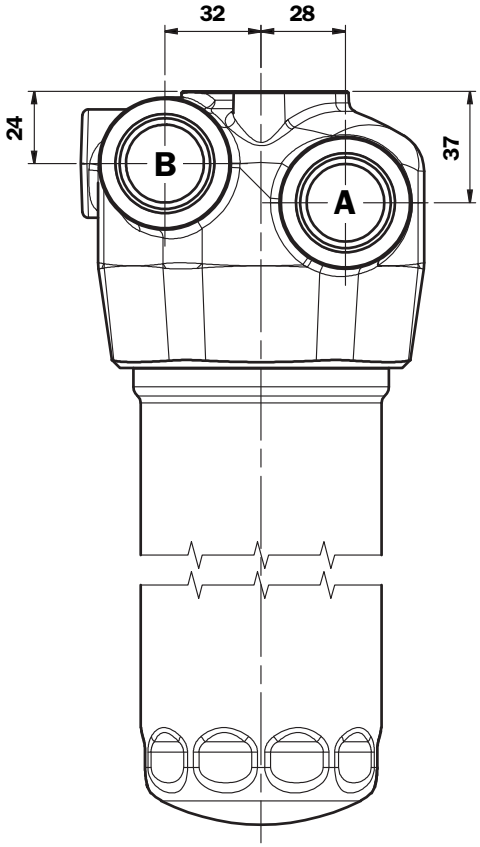

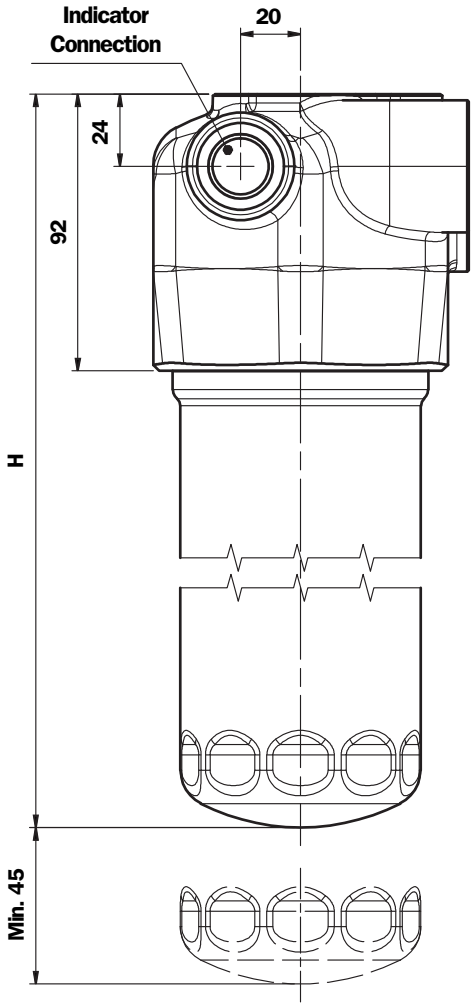

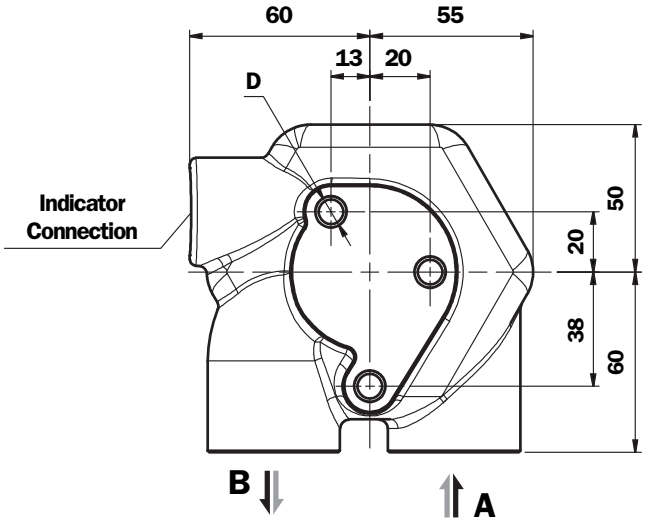

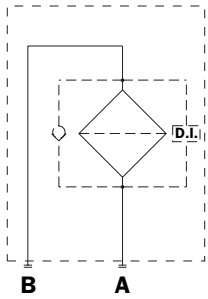

Length Filter	H mm
1	182
2	215
3	265
4	365

	Connections A - B	Fixing holes D
A	G 3/4”	M10 x Depth 12 mm
B	G 1”	M10 x Depth 12 mm
C	3/4” NPT	3/8” UNC x Depth 12 mm
D	1” NPT	3/8” UNC x Depth 12 mm
E	SAE 12	3/8” UNC x Depth 12 mm
F	SAE 16	3/8” UNC x Depth 12 mm

LMP 122/123

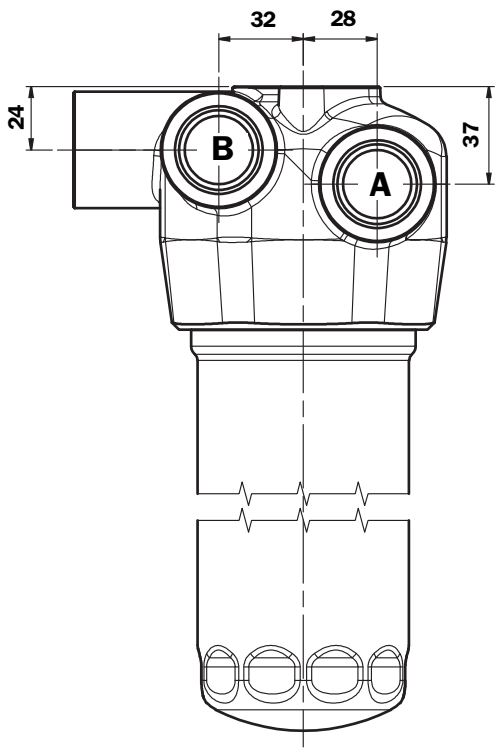

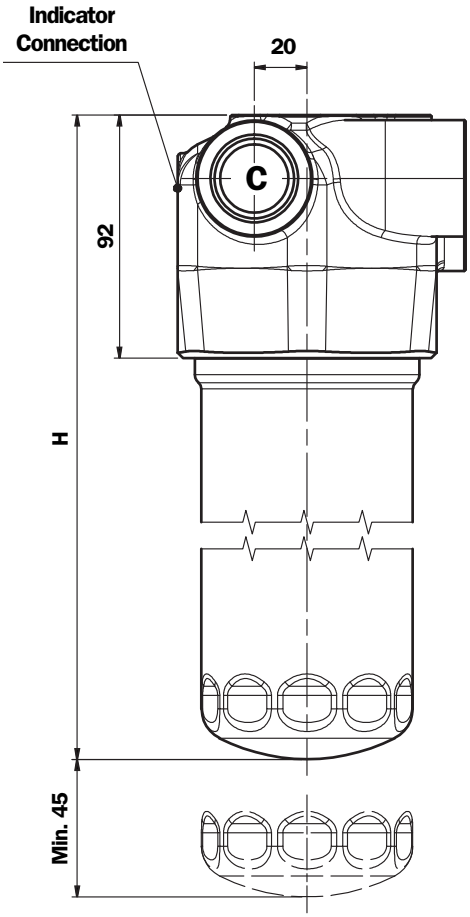

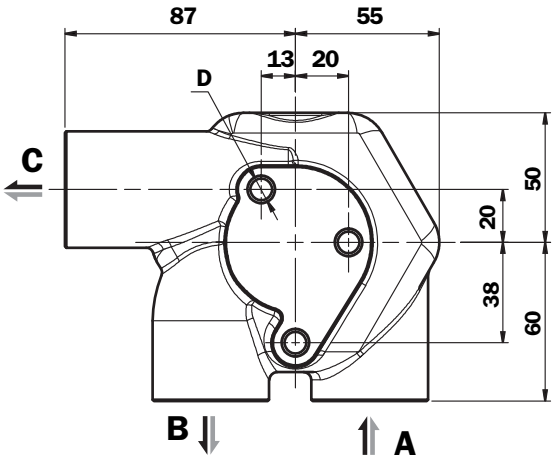

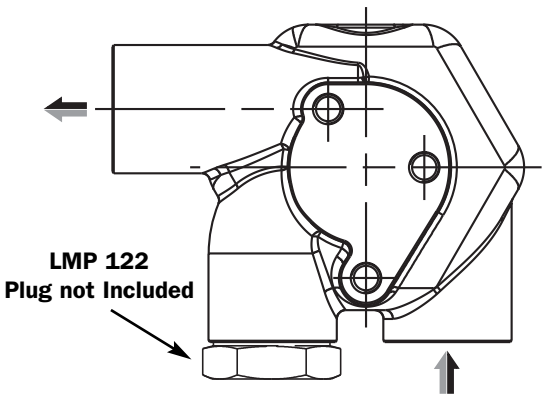

Length Filter	H mm
1	182
2	215
3	265
4	365

	Connections A - B - C	Fixing holes D
B	G 1”	M10 x Depth 12 mm
D	1” NPT	3/8” UNC x Depth 12 mm
F	SAE 16	3/8” UNC x Depth 12 mm

Ordering Information LMP120/122

Filter assembly
LMP

	1	2	3	4	5	6	7	8	9
	☐	☐	☐	☐	☐	☐	☐	☐	☐
Example: LMP	**122**	**2**	**B**	**A**	**B**	**2**	**A10**	**N**	**P01**

Filter element
CU 110

	2	7	4	8	9
	☐	☐	☐	☐	☐
Example: CU110	**2**	**A10**	**A**	**N**	**P01**

1 - Style

- **120**
- **122**

2 - Filter length

- **1**
- **2**
- **3**
- **4**

3 - Valves

- **S** Without bypass
- **B** With bypass valve Opening pressure: 3,5 bar
- ☐ With bypass valve Opening pressure: on request

4 - Seals

- **A** NBR
- ☐ On request

5 - Connections

Type	
A	G 3/4" (not for LMP 122)
B	G 1"
C	3/4" NPT (not for LMP 122)
D	1" NPT
E	SAE 12 (not for LMP 122)
F	SAE 16

6 - Indicator port

- **1** Without indicator port
- **2** With indicator port

7 - Filter element

A03	3 µm	Absolute filtration Inorganic microfibre ßx (c) ≥ 1000
A06	6 µm	
A10	10 µm	
A16	16 µm	
A25	25 µm	
M25	25 µm	Nominal Filtration Metal mesh
M60	60 µm	
P10	10 µm	Nominal Filtration Cellulose
P25	25 µm	

8 - Collapse pressure

- **N** Δp 20 bar

9 - Options

- **P01** MP Filtri standard
- **Pxx** Customer request

Ordering Information LMP123

Filter assembly
LMP

	1	2	3	4	5	6	7	8	9
	☐	☐	☐	☐	☐	☐	☐	☐	☐
Example: LMP	**123**	**2**	**C**	**A**	**B**	**2**	**A10**	**N**	**P01**

Filter element
CU 110

	2	7	4	8	9
	☐	☐	☐	☐	☐
Example: CU110	**2**	**A10**	**A**	**N**	**P01**

1 - Style

123

2 - Filter length

1
2
3
4

3 - Valves

Type 1 - Without bypass valve

C	Check valve 2 bar
D	Check valve 3 bar

Type 2 - Without bypass valve

G	Check valve 2 bar
H	Check valve 3 bar

Type 1 - With bypass valve

M	Check valve 2 bar
N	Check valve 3 bar

Type 2 - With bypass valve

Q	Check valve 2 bar
R	Check valve 3 bar

4 - Seals

A	NBR
	On request

5 - Connections

Type	
B	G 1"
F	SAE 16

6 - Indicator port

1	Without indicator port
2	With indicator port

7 - Filter element

A03	3 µm	Absolute filtration Inorganic microfibre ßx (c) ≥ 1000
A06	6 µm	
A10	10 µm	
A16	16 µm	
A25	25 µm	
M25	25 µm	Nominal Filtration Metal mesh
M60	60 µm	
P10	10 µm	Nominal Filtration Cellulose
P25	25 µm	

8 - Collapse pressure

N	Δp 20 bar

9 - Options

P01	MP Filtri standard
Pxx	Customer request

LMP 124

In-Line
Suction and Return Filter

Maximum pressure 80 bar

Flow rates to 160 l/min

Technical data

LMP 124

Filter housing (Materials)

- Head: Aluminium
- Housing: Cataphoresis painting
- Bypass valve: Brass/Aluminium

Pressure

LMP 124 length: 1 - 2 - 3 - 4

- Working pressure: 80 bar (8 MPa)
- Test pressure: 120 bar (12 MPa)
- Burst pressure: 380 bar (38 MPa)
- Pulse pressure fatigue test: 1.000.000 cycles with pressure from 0 to 80 bar (8 MPa)

Temperature

- From -25°C to +110°C

Bypass valve

- Opening pressure 2.5 bar ±10%
- Other opening pressures on request.

Δp Elements type

- Series N and W elements: 20 bar
- Oil flow from exterior to interior.

Seals

- Standard NBR series A
- Optional FPM series V

Weights (kg)

length	
• LMP124 - 1	1,7
• LMP124 - 2	1,9
• LMP124 - 3	2,2
• LMP124 - 4	2,7

Volumes (dm^3)

length	
• LMP124 - 1	0,75
• LMP124 - 2	0,81
• LMP124 - 3	1,11
• LMP124 - 4	1,53

Compatibility

- Housings compatible with:
  Mineral oils to ISO 2943 - aqueous emulsions synthetic fluids, water and glycol.
- The filter elements are compatible with:
  Mineral oils to ISO 2943, Synthetic fluids Aqueous emulsions, water and glycol (series W required).
- NBR seals series A, compatible with:
  Mineral oils to ISO 2943 - aqueous emulsions synthetic fluids, water and glycol.
- V series FPM seals, compatible with:
  Synthetic fluids type HS-HFDR-HFDS-HFDU To ISO 2943

Filter Element Area

Filter element in stainless steel mesh

	Length			
Type	**1**	**2**	**3**	**4**
CU 110	1302	1764	2464	3864
	Values expressed in **cm^2**			

LMP 124

Filter housings Δp pressure drop

The curves are plotted utilising mineral oil with density of 0.86 kg/dm^3 to ISO 3968.

Δp varies proportionally with density.

LMP 124 - Δp Housing

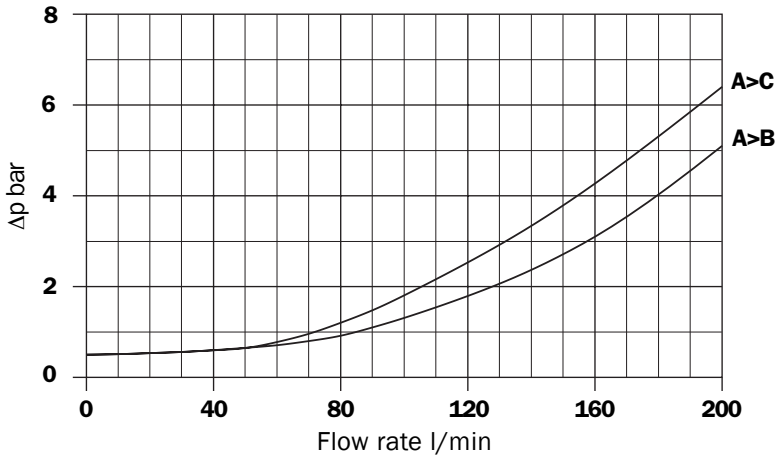

Valves
Bypass valve pressure drop
LMP 124

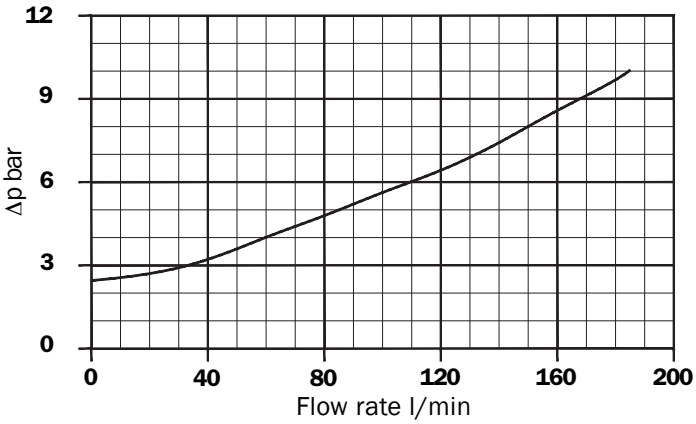

Style C - D - E - F

Absolute filtration A10

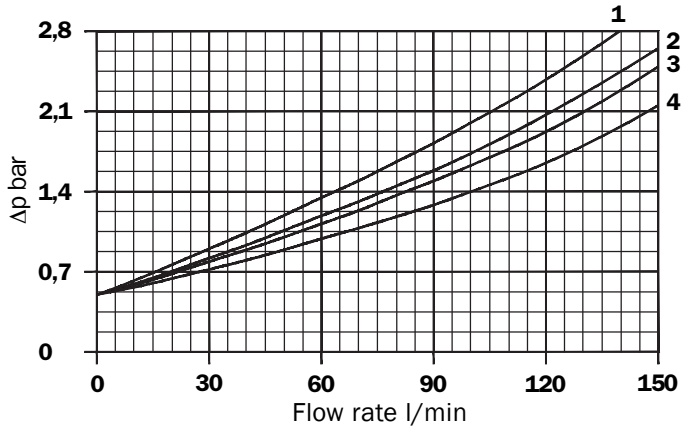

Absolute filtration A16

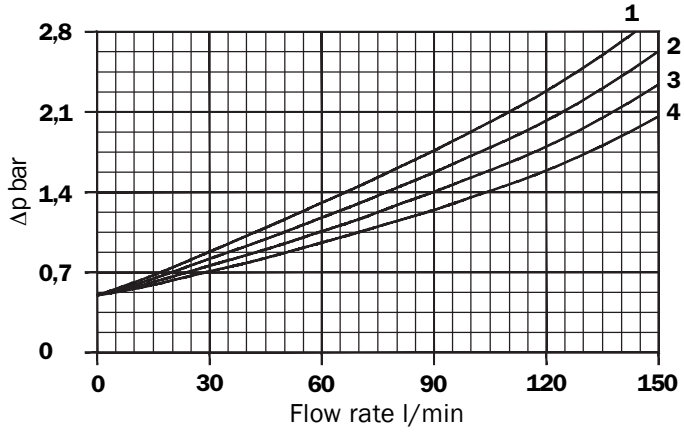

Absolute filtration A25

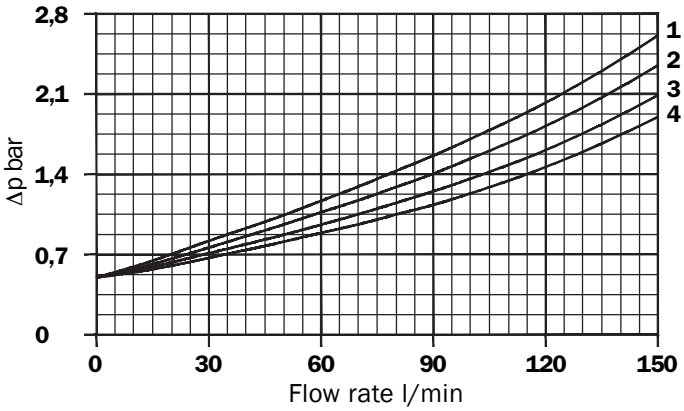

Style G - H

Absolute filtration A10

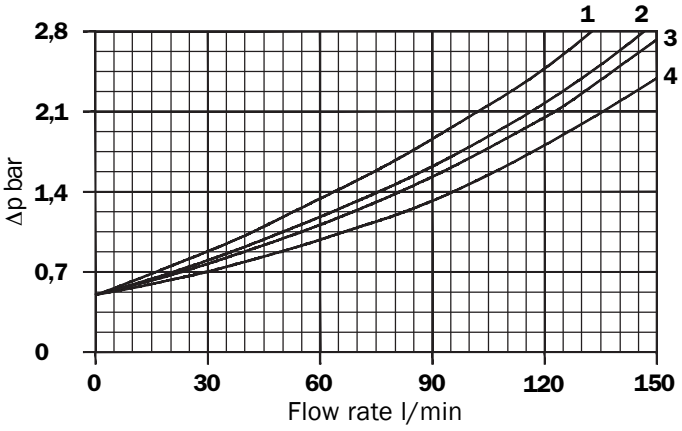

Absolute filtration A16

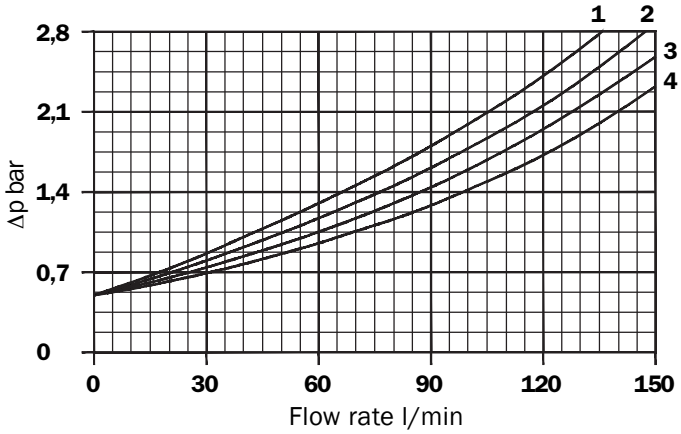

Absolute filtration A25

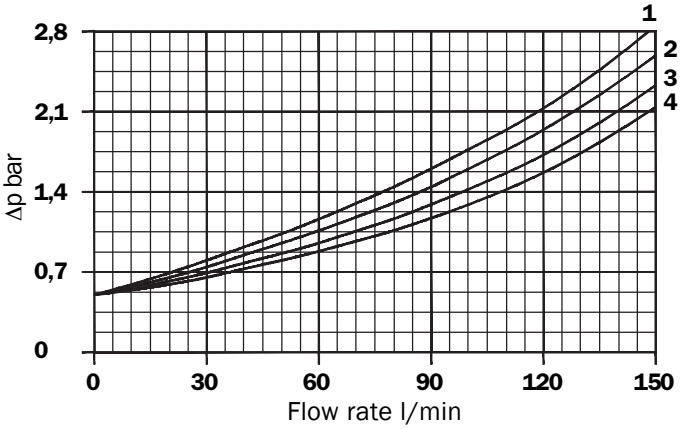

Filter length

1
2
3
4

LMP 124

Style C - D - E - F

LMP 124

Style G - H

Symbols

Style C
LMP 124

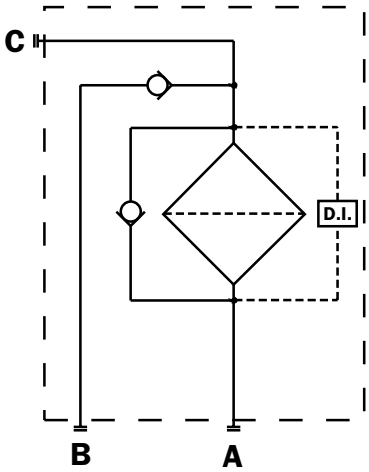

Style E
LMP 124

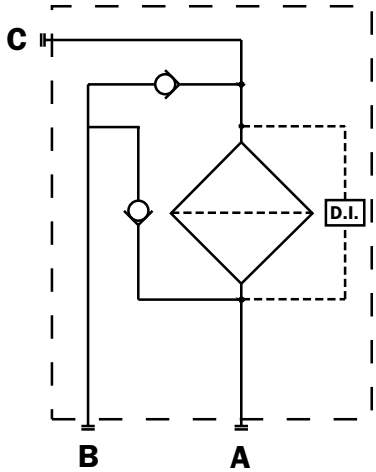

Style G
LMP 124

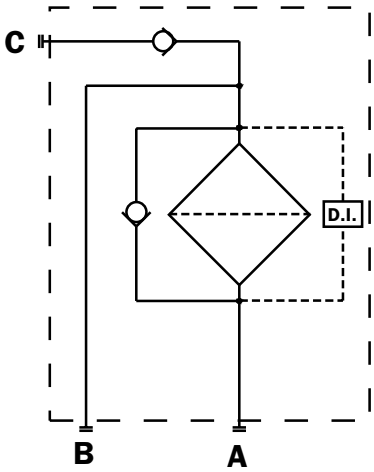

Style D
LMP 124

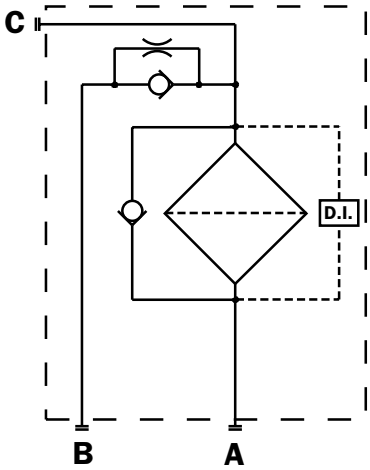

Style F
LMP 124

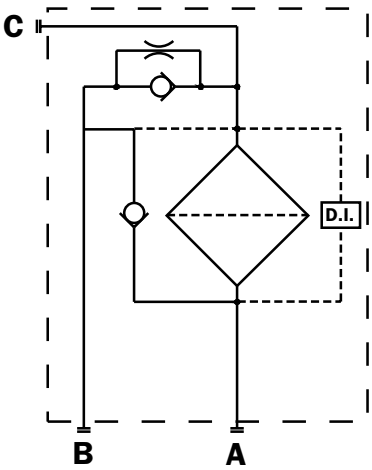

Style H
LMP 124

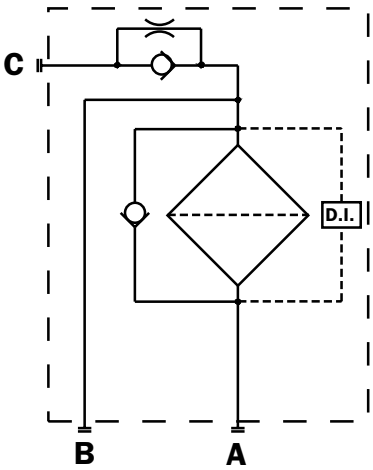

Filter sizing

Correct sizing of the filter must be based on a variable pressure drop depending on the application:

- return filter — Δp from 0.4 to 0.6 bar
- filter on lubrication lines — Δp from 0.3 to 0.5 bar
- off-line fluid power plants — Δp from 0.3 to 0.4 bar
- off-line filter test benches — Δp from 0.1 to 0.3 bar
- over-boost filter — Δp from 0.4 to 0.6 bar

The pressure drop calculation is performed by adding together the value for the housing and the value for the filter element.
The pressure drop in the housing is proportional to the fluid density kg/dm^3; all the graphs in the catalogue are referred to mineral oil with density of 0.86 kg/dm^3.
The filter element pressure drop value is proportional to viscosity mm^2/s, the Y values in the catalogue are referred to viscosity of 30 mm^2/s.

Sizing data for single cartridge, head at top

Δp Tot.
Δpc Filter housing
Δpe Filter element
Y Multiplication factor (see below)
Q l/min = flow rate
V1 = reference viscosity 30 mm^2/s (cSt)
V2 = operating viscosity in mm^2/s (cSt)
Δp Tot. = Δpc + Δpe
Δpe = Y : 1000 x Q x (V2/V1)

Multiplication factor "Y" for definition of the pressure drop of filter elements.

Reference viscosity 30 mm$^{2/s}$

Filter Element	Absolute Filtration Serie N					Nominal Filtration Serie N		Nominal Filtration Serie N
Type	**A 0 3**	**A 0 6**	**A 1 0**	**A 1 6**	**A 2 5**	**P 1 0**	**P 2 5**	**M 2 5**
CU 110 1	16,25	15,16	8,754	8,142	5,875	2,862	2,651	0,1431
2	12,62	10,44	6,111	6,024	4,155	1,598	1,486	0,1253
3	8,571	7,951	5,066	4,066	2,397	1,242	1,153	0,1067
4	5,759	4,051	2,798	2,358	1,142	0,9072	0,8491	0,0558

Dimensions

LMP 124

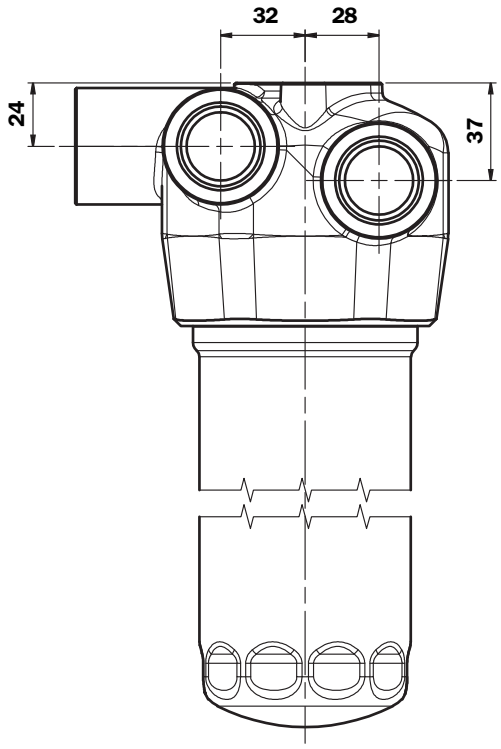

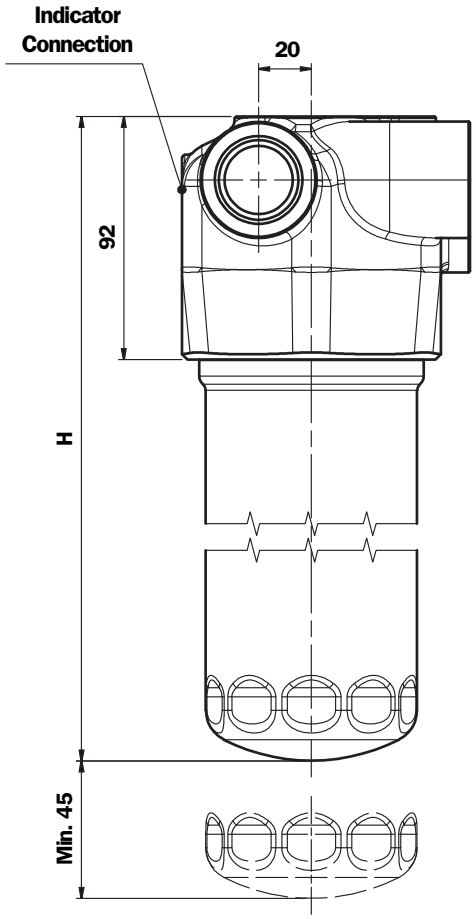

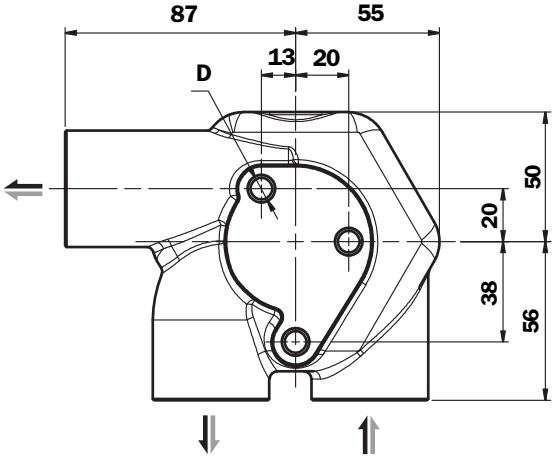

Length Filter	H mm
1	182
2	215
3	265
4	365

	Threaded Connections A - B - C	Fixing holes D
B	G 1”	M10 x Depth 12 mm
F	SAE 16	3/8” UNC x Depth 12 mm

Symbols

Style C
LMP 124

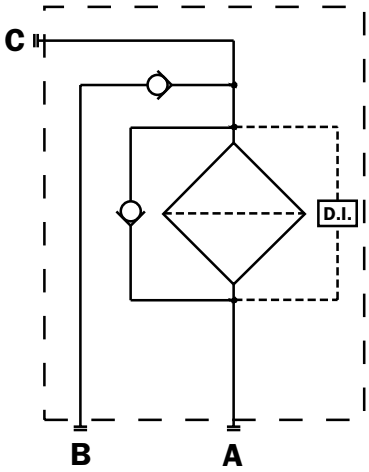

Style E
LMP 124

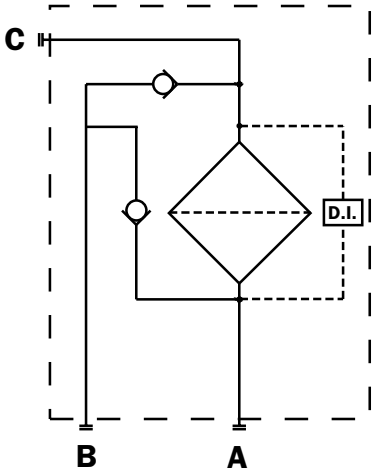

Style G
LMP 124

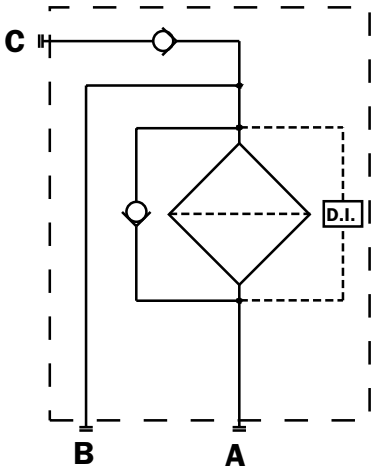

Style D
LMP 124

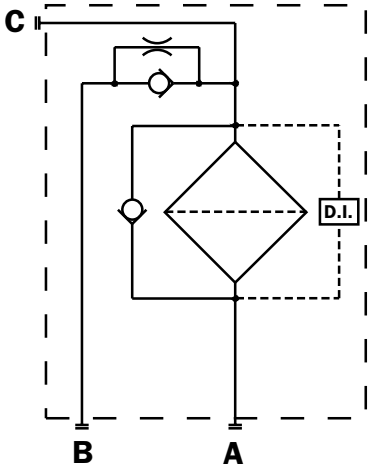

Style F
LMP 124

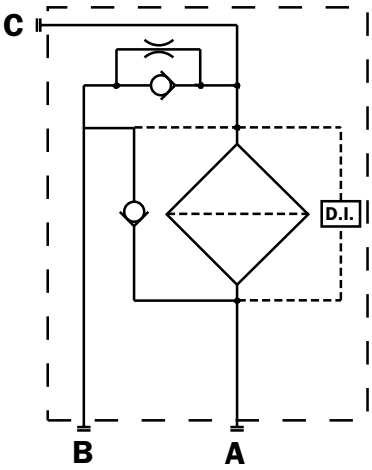

Style H
LMP 124

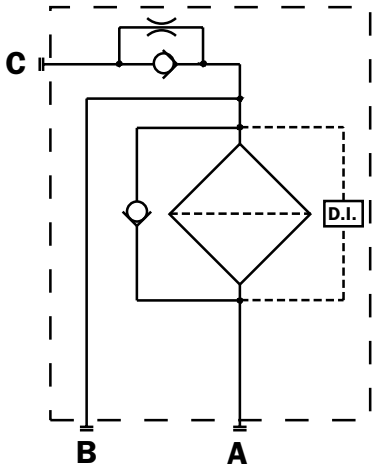

Ordering information LMP124

Filter assembly
LMP

	1	2	3	4	5	6	7	8	9
	☐	☐	☐	☐	☐	☐	☐	☐	☐
Example: LMP	**124**	**2**	**C**	**A**	**B**	**2**	**A10**	**N**	**P01**

Filter element
CU 110

	2	7	4	8	9
	☐	☐	☐	☐	☐
Example: CU110	**2**	**A10**	**A**	**N**	**P01**

1 - Style

124

2 - Filter length

1
2
3
4

3 - Valves

C
D
E
F
G
H

see “SYMBOLS” (ref. to pages 21 and 24)

4 - Seals

A	NBR
V	FPM

5 - Connections

Type	
B	G 1”
F	SAE 16

6 - Indicator port

1	No
2	Port G 1/8” For pressure switch
3	Port G 1/4” For pressure switch
4	Differential indicator port

7 - Filter element

A10	10 µm	Absolute filtration Inorganic microfibre ßx (c) ≥ 1000
A16	16 µm	
A25	25 µm	

8 - Collapse pressure

N	Δp 20 bar

9 - Option

P01	MP Filtri standard
Pxx	Customer request

Spare parts

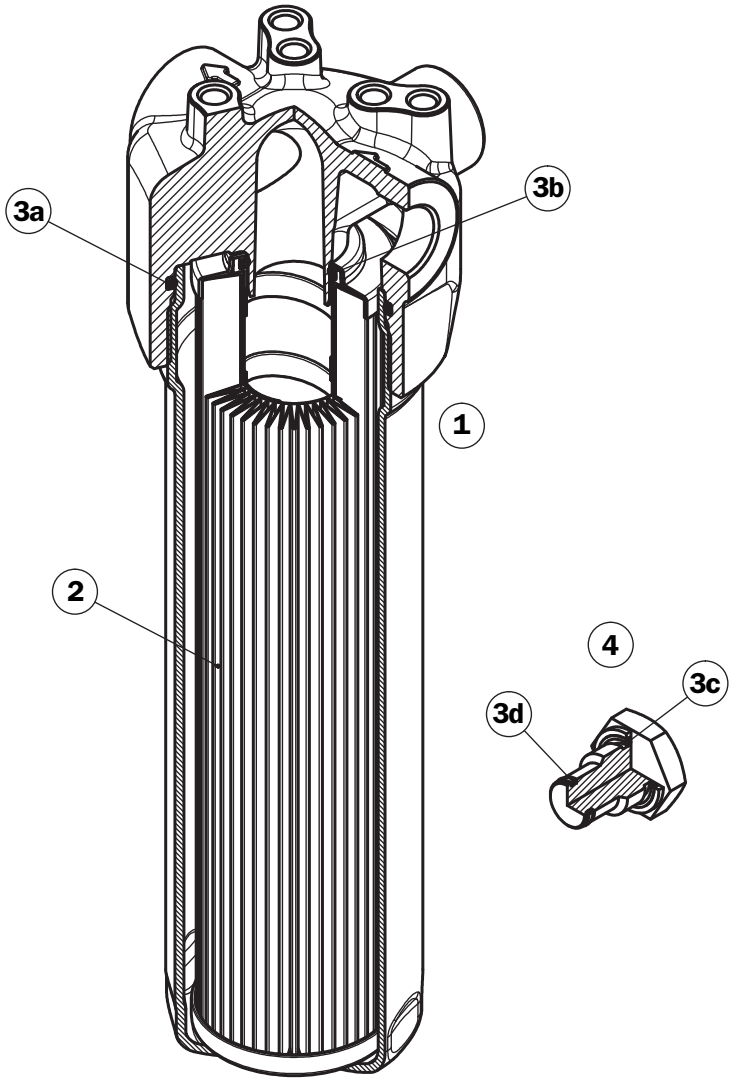

Pos.	Description	Qty	FILTER Series LMP 110 - 112 - 116 - 118	
1	Filter assembly	1	See order table	
2	Filter element	1	See order table	
3	Seals Kit	1	NBR 02050478	FPM 02050479
3a	O-Ring for housing	1	O-R 4312 Ø 78,97 x 3,53	
3b	O-Ring for filter element	1	O-R 4125 Ø 31,34 x 3,53	
3c	Gasket for indicator	1	NBR 01030058	FPM 01030046
3d	O-Ring for indicator	1	O-R 2050 Ø 12,42 x 1,78	
4	Indicator Plug	1	T2H	T2V
-	Indicators	1	See order table	

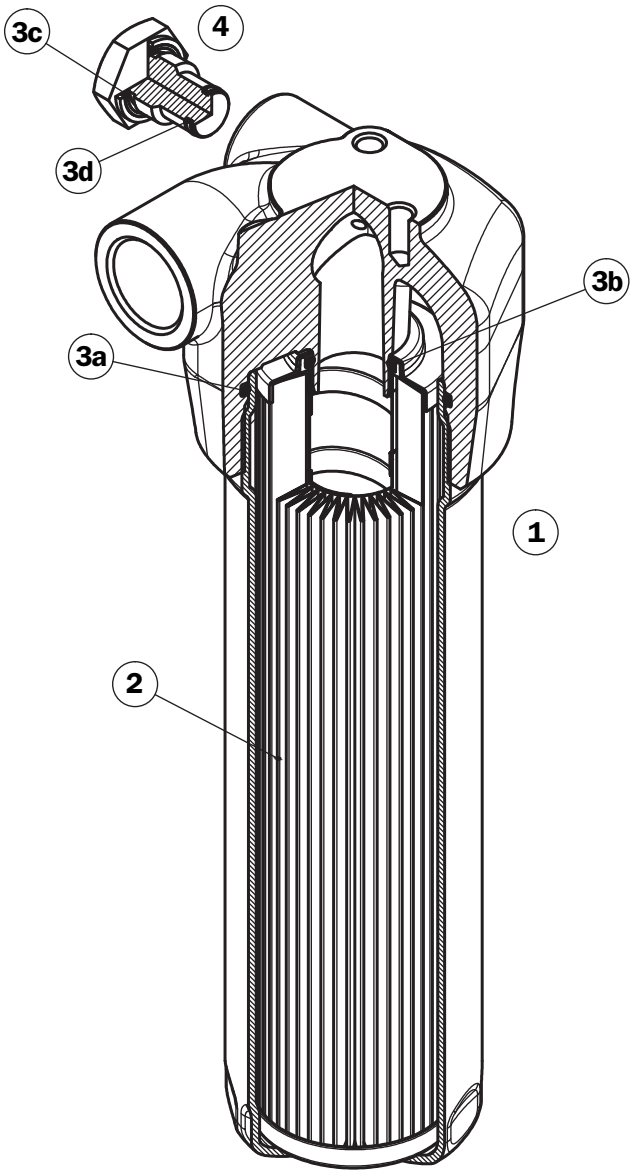

Pos.	Description	Qty	FILTER Series LMP 120	
1	Filter assembly	1	See order table	
2	Filter element	1	See order table	
3	Seals Kit	1	NBR 02050478	FPM 02050479
3a	O-Ring for housing	1	O-R 4312 Ø 78,97 x 3,53	
3b	O-Ring for filter element	1	O-R 4125 Ø 31,34 x 3,53	
3c	Gasket for indicator	1	NBR 01030058	FPM 01030046
3d	O-Ring for indicator	1	O-R 2050 Ø 12,42 x 1,78	
4	Indicator Plug	1	T2H	T2V
-	Indicators	1	See order table	

Spare parts

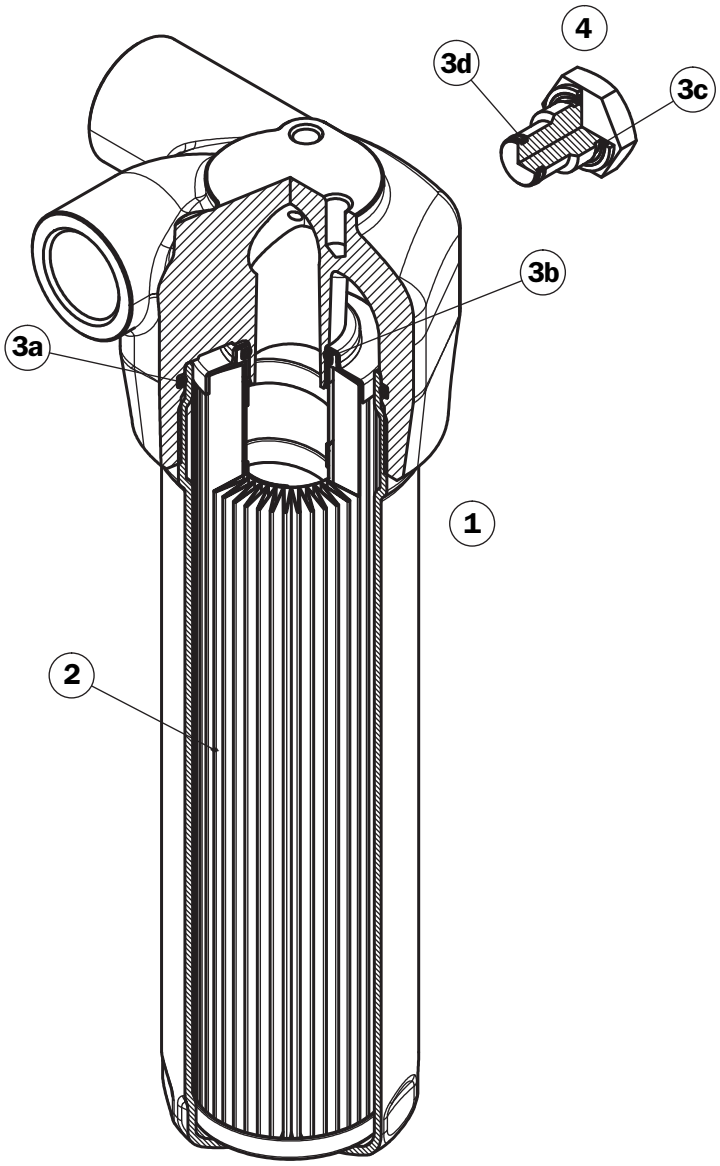

Pos.	Description	Qty	FILTER Series LMP 122 - 124	
1	Filter assembly	1	See order table	
2	Filter element	1	See order table	
3	Seals Kit	1	NBR 02050478	FPM 02050479
3a	O-Ring for housing	1	O-R 4312 Ø 78,97 x 3,53	
3b	O-Ring for filter element	1	O-R 4125 Ø 31,34 x 3,53	
3c	Gasket for indicator	1	NBR 01030058	FPM 01030046
3d	O-Ring for indicator	1	O-R 2050 Ø 12,42 x 1,78	
4	Indicator Plug	1	T2H	T2V
-	Indicators	1	See order table	

Differential indicators

Order code

1	2	3	4	5	6	7

Example: NM 7 H A 11 P01

1 - Styles

NR	Electrical
KR	Electrical-Visual
NM	Electrical IP 67
Z	Visual
U	Visual

2 - Differential trip pressure

6	2 bar ± 10% (with bypass filter)
7	5 bar ± 10% (without bypass filter)

3 - Power supply voltage

(only for style KR - only voltage DC)

1	24 Volt
2	110 Volt

4 - Seals

H	HNBR Standard
V	FPM
x	Others on request

5 - Thermostat (only for style NM)

A	Without
C	50°

6 - Electrical connector (only for style NM)

11	Connector AMP superseal series 1.5
21	Connector AMP timer
31	Connector DEUTSCH DT 04-2-P
32	Connector DEUTSCH DT 04-3-P
41	Length electrical cable 0,5 m

7 - Option

P01	MP standard

Pressure:

Working pressure 420 bar

Pulse pressure fatigue test: 1.000.000 cycles with pressure from 0 to 420 bar (42 MPa)

SERIES Z VISUAL

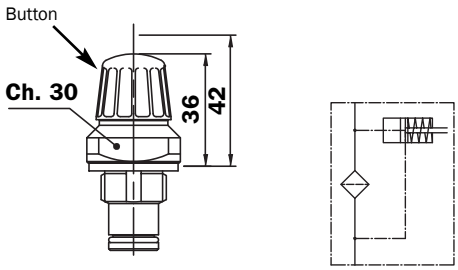

Visual indicator with manual reset.

Nylon signalling button.

Button depressed position	= cartridge clean.
Button raised position, Red	= cartridge clogged.
Weight:	118 gr.
Tightening torque:	60 Nm.

SERIES U VISUAL

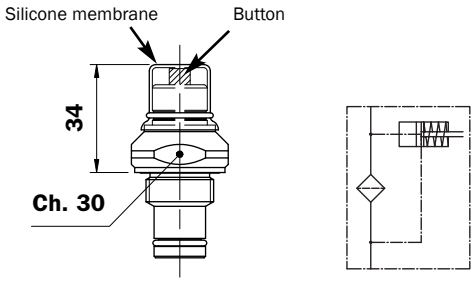

"U" indicator provide to accurate view indication of filter element condition.

Visual signal	Red button down: clean cartridge Red button up: clogging cartridge
Button depressed position	= cartridge clean.
Button rised position	= cartridge clogged.
Connection	G 1/2"
Tightening torque:	65 Nm
Weight:	128 gr

SERIES NR ELECTRICAL

Connector EN 175301-803 A/ISO 4400

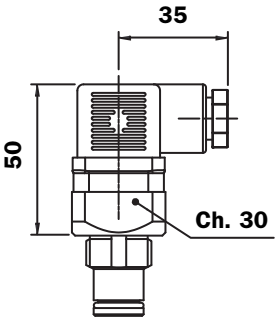

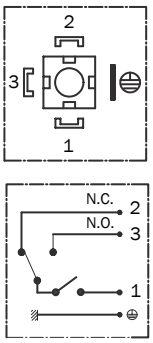

Switching type	N/O or N/C contacts (change over Contact)
Max. contact rating	0,8 A / 24 Vdc 0,17 A / 115 Vdc
Max power supply voltage	230Vac
Electrical connection	EN 175301-803
Cable gland	PG 9
Protection rating	IP 65
Connection	G 1/2”
Tightening torque:	65 Nm
Weight:	123 gr

SERIES KR ELECTRICAL/VISUAL

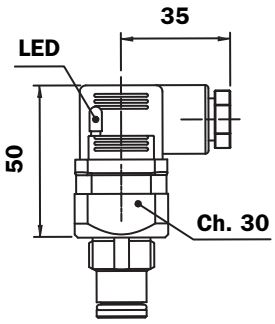

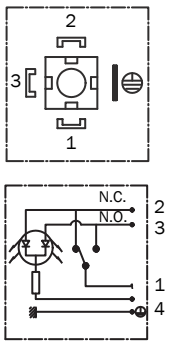

Switching type	N/O or N/C contacts (change over Contact)
Max. contact rating	0,8 A / 24 Vdc 0,17 A / 115 Vdc
Max power supply voltage	24Vdc - 115 Vdc/ac - 230 Vac
Electrical connection	EN 175301-803 visual indicator by LED GREEN LED = Clean element. RED LED= Blocched element.
Cable gland	PG 9
Protection rating	IP 65
Connection	G 1/2”
Tightening torque:	65 Nm
Weight:	123 gr

SERIES NM ELECTRICAL

32

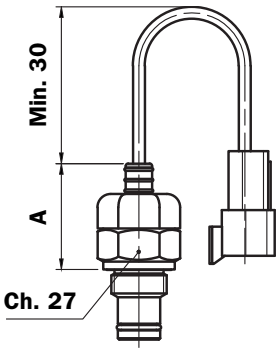

41

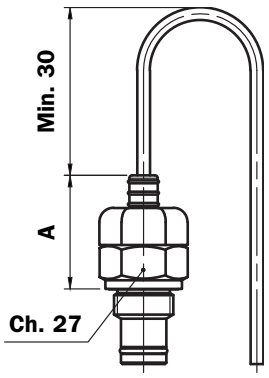

11

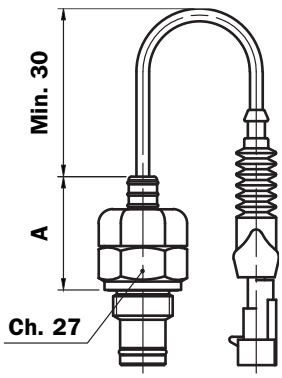

21

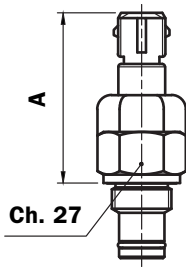

31

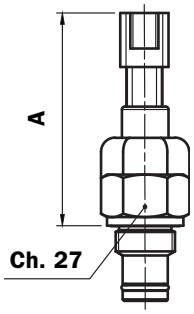

Length indicator NM

	A	
	Without thermostat	**With thermostat**
NM - 11	40	50
NM - 21	60	70
NM - 31	75	85
NM - 32	40	50
NM - 41	40	50

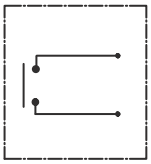

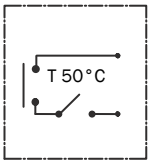

Switching type	N/O contacts N/O thermostat
Max. contact rating	0,8 A / 24 Vdc 0,17 A / 115 Vdc
Max power supply voltage	Max. 120Vdc
Electrical connection	11 Connector AMP superseal series 1.5 21 Connector AMP timer 31 Connector DEUTSCH DT 04-2-P 32 Connector DEUTSCH DT 04-3-P 41 Lenght electrical cable 0,5 m
Protection rating	IP 67
Connection	G 1/2”
Tightening torque:	65 Nm
Weight:	125 gr

Recommended maximum flow rate

- Pressure drop of filter assembly equal to Δp 0,7 bar.
- Oil kinematic viscosity 30 mm^2/s (cSt).
- Density 0,86 kg/dm^3.

LMP	110/118	112	116	120	122	
Filtration	Flow rate l/min	Flow rate l/min	Flow rate l/min	Flow rate l/min	Flow rate l/min	Filter length
A03	40	36	36	39	42	
A06	42	37	37	42	44	
A10	63	55	53	66	70	
A16	68	57	56	69	74	1
A25	83	65	64	87	92	
M25	111	83	77	126	132	
P10	114	85	80	129	137	
P25	153	112	95	187	205	
A03	49	43	43	48	52	
A06	57	49	47	57	61	
A10	80	65	64	86	90	
A16	82	67	65	88	91	2
A25	97	75	72	108	115	
M25	128	93	86	150	159	
P10	130	94	87	153	163	
P25	155	114	96	187	205	
A03	45	54	55	67	72	
A06	69	58	56	72	77	
A10	88	70	67	97	100	
A16	98	76	73	110	113	3
A25	118	87	83	136	141	
M25	133	95	88	158	169	
P10	135	96	89	161	173	
P25	158	115	97	188	208	
A03	66	66	63	88	93	
A06	98	76	72	108	113	
A10	112	87	79	128	133	
A16	117	88	83	135	143	4
A25	136	96	87	162	172	
M25	140	98	90	168	178	
P10	140	98	92	170	180	
P25	160	115	98	190	215	

New Headquarters:

MP FILTRI S.p.A. Italy
Via 1° Maggio, n. 3
20060 Pessano con Bornago
(Milano) Italy
Tel. +39.02/95703.1
Fax +39.02/95741497-95740188
email: sales@mpfiltri.com
http://www.mpfiltri.com

GREAT BRITAIN
MP FILTRI U.K. Ltd.
Bourton Industrial Park
Bourton on the Water
Gloucestershire GL54 2HQ UK
Phone: +44.01451-822522
Fax: +44.01451-822282
email: sales@mpfiltri.co.uk
http://www.mpfiltri.com

GERMANY
MP FILTRI D GmbH
Am Wasserturm 5
D-66265 Heusweiler/Holz
Phone: +49.06806-85022.0
Fax: +49.06806-85022.18
email: service@mpfiltri.de
http://www.mpfiltri.com

FRANCE
MP FILTRI FRANCE Sas
Parc d'activités des Chanteraines
8 rue du Commandant d'Estienne
d'Orves, Immeuble D3
92396 Villeneuve la Garenne - France
Phone: +33(0)1.40.86.47.00
Fax: +33(0)1.40.86.47.09
e-mail: sales@mpfiltrifrance.com
http: //www.mpfiltri.com

USA
MP FILTRI USA Inc.
2055 Quaker Pointe Drive
Quakertown, PA 18951
Phone: +1.215-529-1300
Fax: +1.215-529-1902
email: sales@mpfiltriusa.com
http://www.mpfiltriusa.com

CANADA
MP FILTRI CANADA Inc.
380 Four Valley Drive Concord
Ontario Canada L4K 5Z1
Phone: +1.905-303-1369
Fax: +1.905-303-7256
email: mail@mpfiltricanada.com
http://www.mpfiltricanada.com

RUSSIAN FEDERATION
MP FILTRI RUSSIA
Phone/Fax: +7(495)220-94-60
P.O. Box 44 127562 Moscow, Russia
email: mpfiltrirussia@yahoo.com
http://www.mpfiltri.ru

CHINA
MP FILTRI (Shanghai) Co. Ltd.
1280 Lianxi Road, 8 Bld - 2 Floor
Shanghai, Pudong
201204 P.R. China
Phone: + 86.21-58919916
Fax: + 86.21-58919667
email: sales@mpfiltrishanghai.com
http://www.mpfiltri.com

INDIA & UAE
MP FILTRI INDIA & UAE
Phone: +91.9945599899
e-mail: s.mishra@mpfiltri.com
http: //www.mpfiltri.com