LMD 400 - 401 431

LMD SERIES 400 - 401 431

Working pressure 16 bar

LMD 400 - 401 - 431
Duplex filter

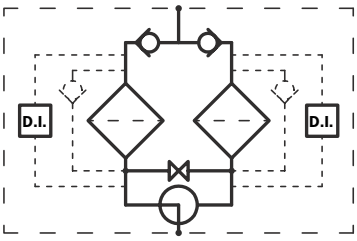

Technical data

Filter housings (Materials)

- Head: Anodized Aluminium
- Housing: Anodized Aluminium
- Manifolds: Steel - Painted black
- Bypass valve: Steel / Stainless steel
- 3-way ball valve: - Steel housings
  - Stainless steel ball
- Valve: phosphated steel - ASI 304

Pressure

- SAE Flange
- Working pressure: 16 bar (1.6 MPa)
- Test pressure: 25 bar (2.5 MPa)

Temperature

- From -25°C to +110°C

Bypass valve

- Opening pressure 3.5 bar ±10%
- Other opening pressures on request.

Filter elements Δp

- Series N and W elements: 20 bar
- Oil flow from exterior to interior.

Seals

- Standard FPM series V

Weights (kg)

Length

- LMD400/401 4 60
- LMD400/401 5 65
- LMD400/401 6 72
- LMD431 5 68
- LMD431 6 75

Volumes (dm^3)

Length

- LMD400/401/431 4 18
- LMD400/401/431 5 24
- LMD400/401/431 6 32

Connections

Inlet/Outlet

- Twin vertically mounted (excluded version LMD400)
- In-line

Compatibility

- Housings compatible with:
  Mineral oils to ISO 2943 - aqueous emulsions synthetic fluids, water and glycol.
- The filter elements are compatible with:
  Mineral oils to ISO 2943, Synthetic fluids Aqueous emulsions, water and glycol (series W required).
- NBR seals series A, compatible with:
  Mineral oils to ISO 2943 - aqueous emulsions synthetic fluids, water and glycol.
- V series FPM seals, compatible with:
  Synthetic fluids type HS-HFDR-HFDS-HFDU To ISO 2943

Filter Element Area of Working Housing/Housings

Filter element in stainless steel mesh

	Length		
Type	**4**	**5**	**6**
CU400	6550	10200	15300
	Values expressed in **cm^2**		

Filter housings Δp pressure drop

The curves are plotted utilising mineral oil with density of 0.86 kg/dm^3 to ISO 3968.

Δp varies proportionally with density.

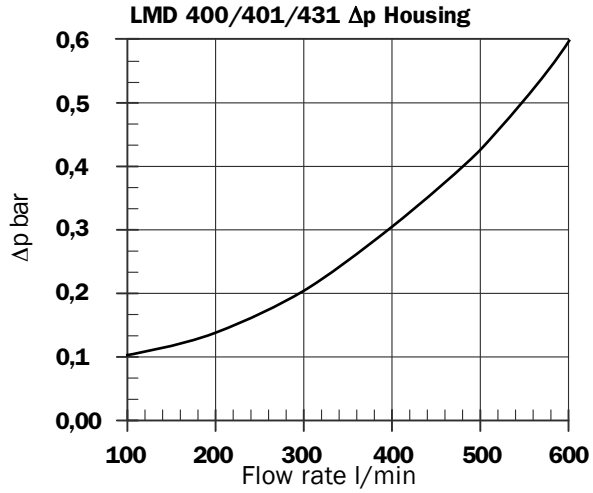

Valves

Bypass valve pressure drop

For individual filter

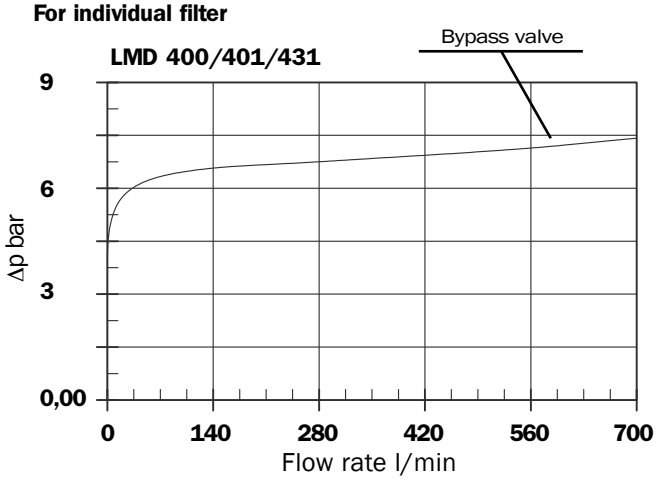

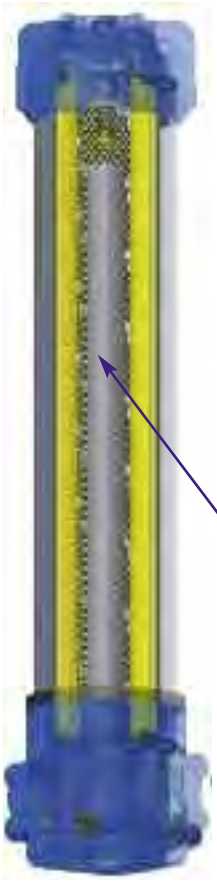

Option P02 “Internal tube for reduced flow rate” is recommended for flow rate values below: 150 l/min.
The use of option P02 makes it easier to fill the housing with the operating fluid.

P02 “Internal tube for reduced flow rates”

Recommended maximum flow rate

Recommended maximum flow rate for filters installed on lubrication lines, return or in-line filters is defined by the maximum oil velocity in the connections.
For filters mounted on Off-Line lines the maximum recommended flow rate is defined by the pressure drop of the filter element.

Filter for pressurised lubrication, max. oil velocity 2.5 m/sec.
Return or in-line filter, max oil velocity 5 m/sec.

Flange Connection

Flange
2 1/2” SAE 3000 psi

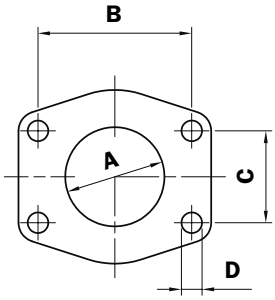

	Connections
Oil velocity	2 1/2”
2,5 m/sec.	500
5 m/sec.	1000

Flow rate l/min

Connections Flange IN-OUT	2 1/2” SAE 3000 psi/M	2 1/2” SAE 3000 psi/UNC
A	63	63
B	88,90	88,90
C	50,80	50,80
D	M12	1/2” UNC

Recommended maximum flow rate

- Pressure drop of filter assembly equal to Δp 0.6 bar.
- Oil kinematic viscosity 30 mm^2/s (cSt).
- Density 0.86 kg/dm^3.

Filter element type	Flow rate l/min Series N	Filter Type	Length
A03	265	LMD 400 LMD 401	4
A06	310		
A10	410		
A16	430		
A25	485		
P10	500		
P25	520		
M25	570		
A03	355	LMD 400 LMD 401 LMD 431	5
A06	385		
A10	465		
A16	500		
A25	540		
P10	530		
P25	540		
M25	580		
A03	390	LMD 400 LMD 401 LMD 431	6
A06	440		
A10	510		
A16	520		
A25	560		
P10	540		
P25	555		
M25	590		

Dimensions

LMD 400
Length 4

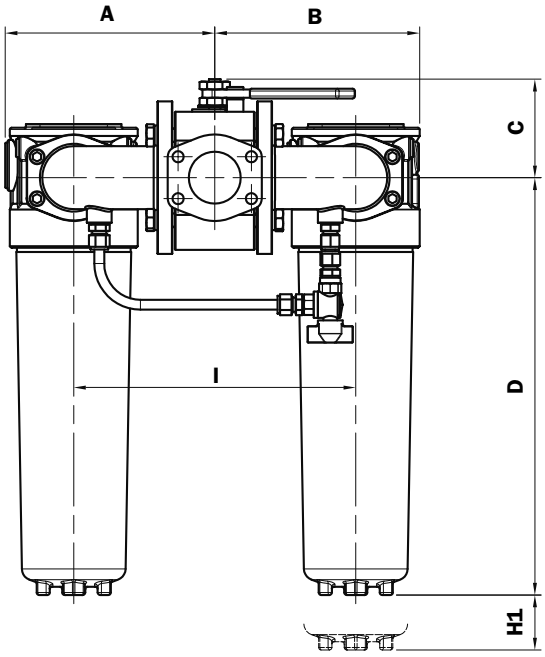

LMD 400
Length 5 - 6

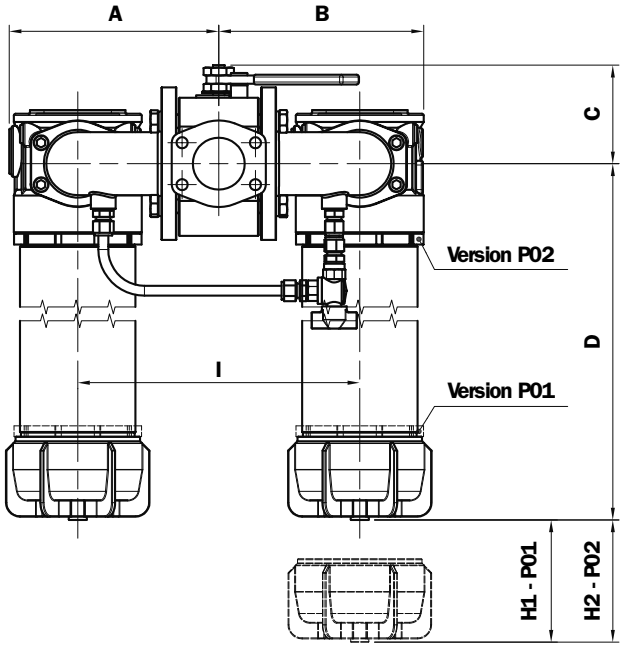

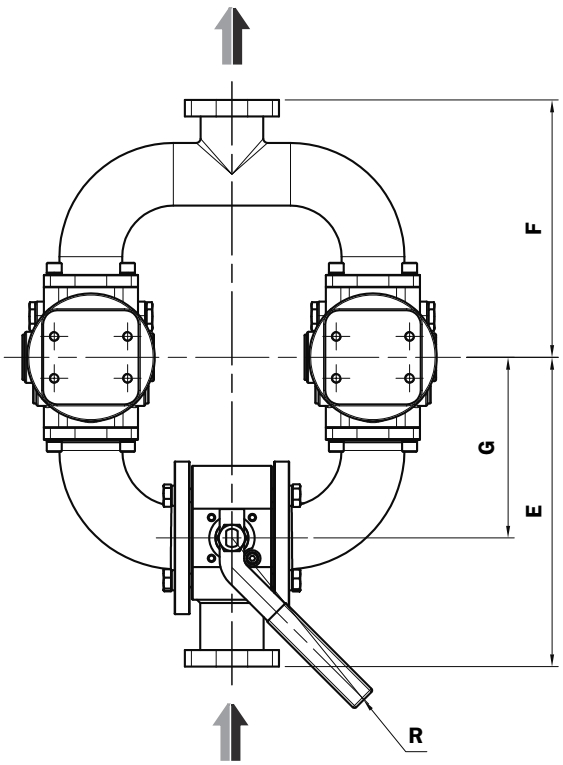

Filter fixing holes LMD 400

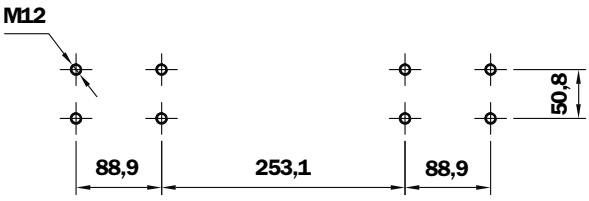

	Length 4	Length 5	Length 6
A	255	255	255
B	255	255	255
C	120	120	120
D	513	765	1095
E	351	351	351
F	285	285	285
G	195	195	195
H1	120	120	120
H2	-	660	990
I	342	342	342
R	255	255	255

LMD 401
Length 4

LMD 401
Length 5 - 6

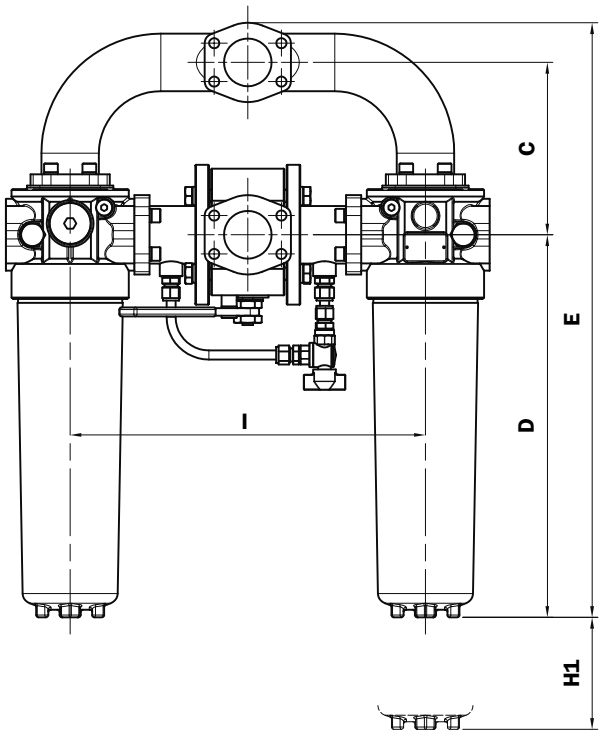

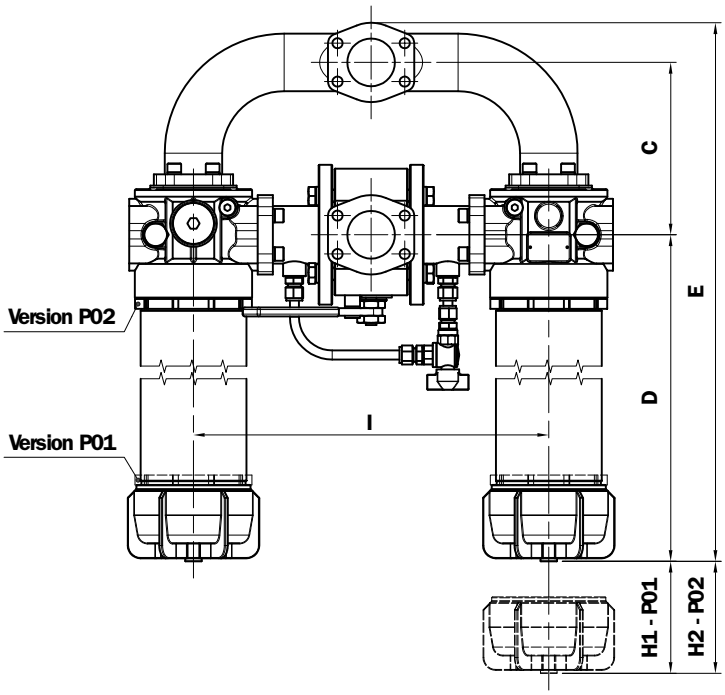

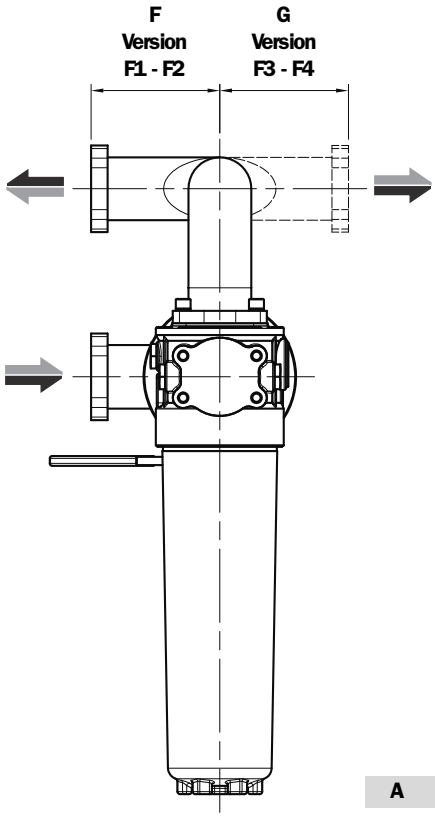

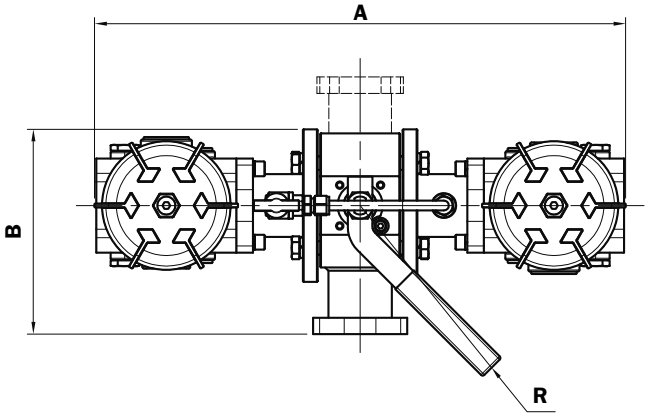

	Length 4	Length 5	Length 6
A	640	640	640
B	250	250	250
C	228	228	228
D	513	765	1095
E	796	1048	1378
F	156	156	156

	Length 4	Length 5	Length 6
G	156	156	156
H1	120	120	120
H2	-	660	990
I	470	470	470
R	255	255	255

LMD 431

Length 5 - 6

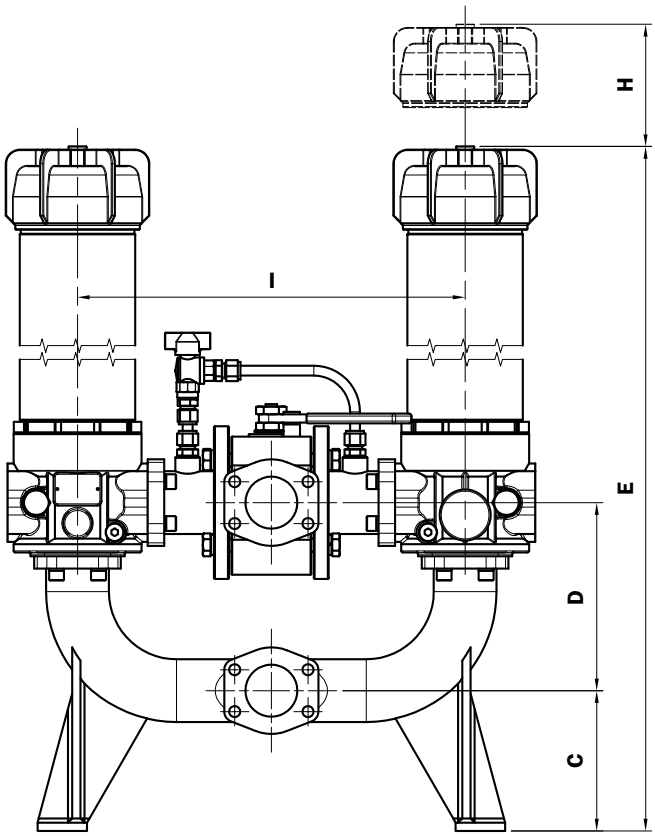

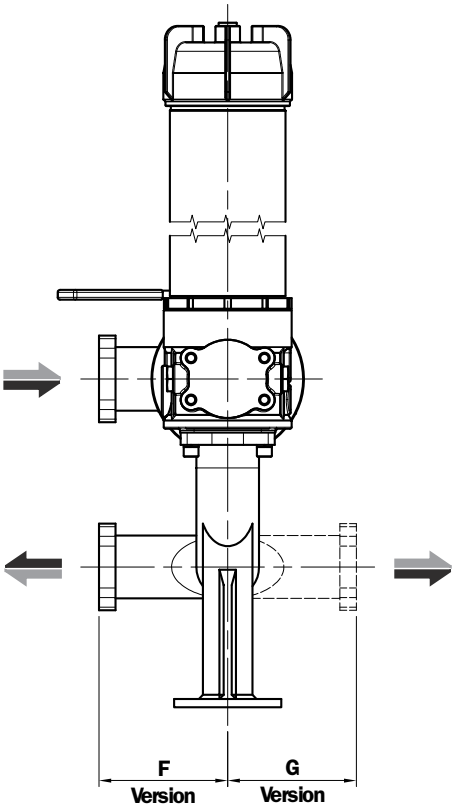

F
Version
F1 - F2

G
Version
F3 - F4

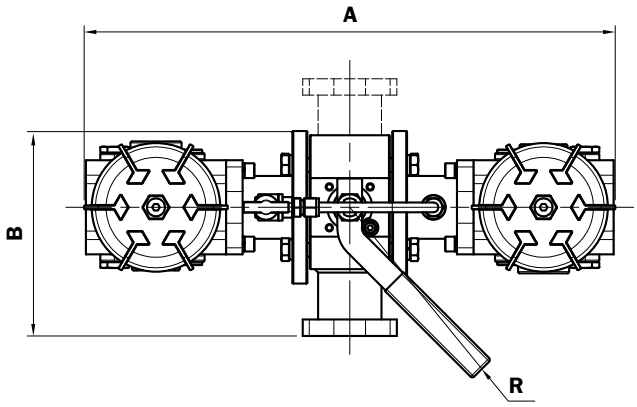

Filter fixing holes LMD 431

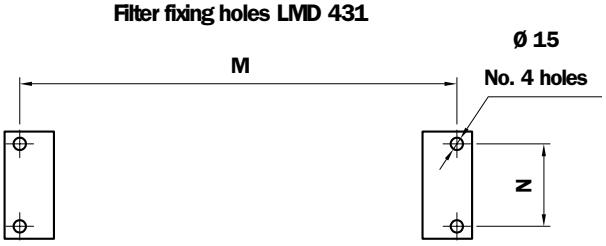

	Length 5	Length 6
A	640	640
B	250	250
C	170	170
D	228	228
E	1165	1495
F	156	156
G	156	156
H	660	990
I	470	470
M	530	530
N	100	100
R	255	255

LMD 400

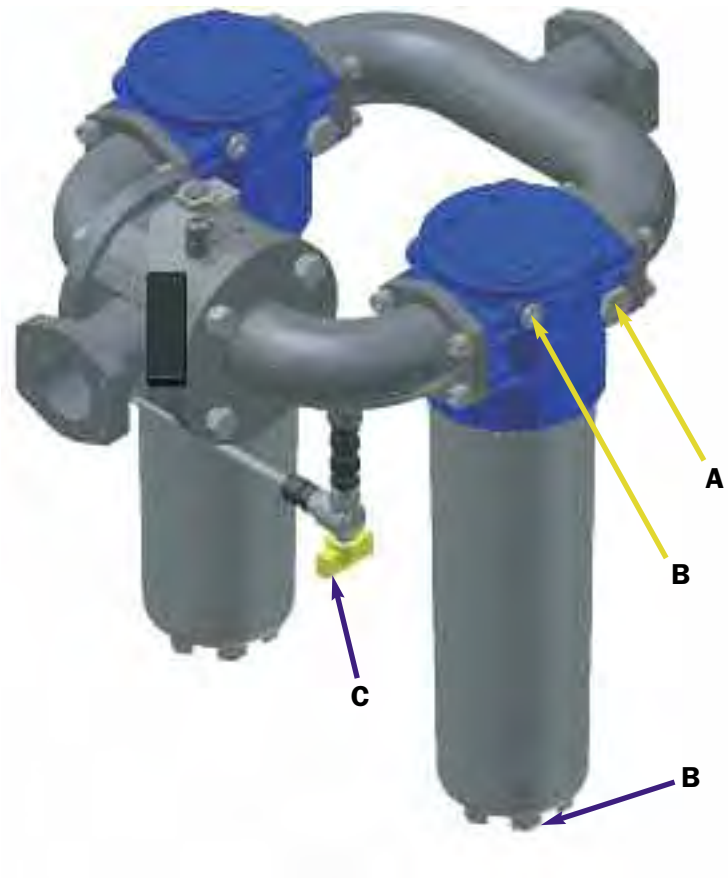

LMD 431

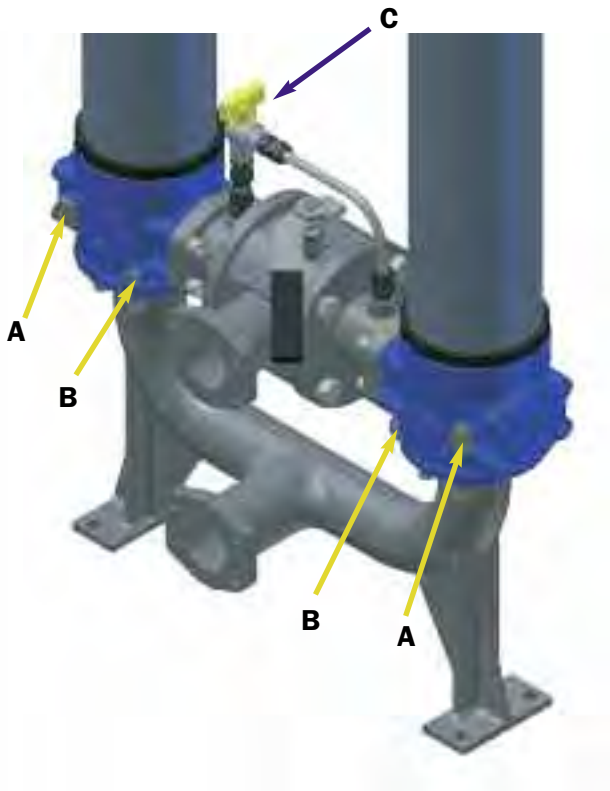

A Indicator connection plug T2 Ch. 30

B Oil drain plug G 1/2” Ch. 10

C Compensation valve

D Breather plug G 1/2” Ch. 10

Differential indicator:

LMD 400 - 401 - 431 Fit one indicator per individual filter assembly

LMD 401

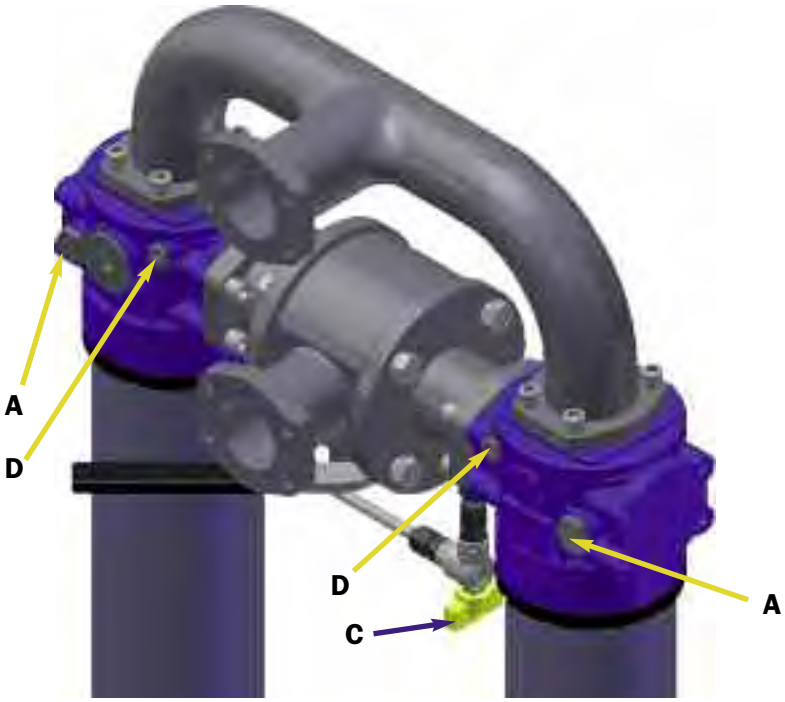

LMD 400 spare parts

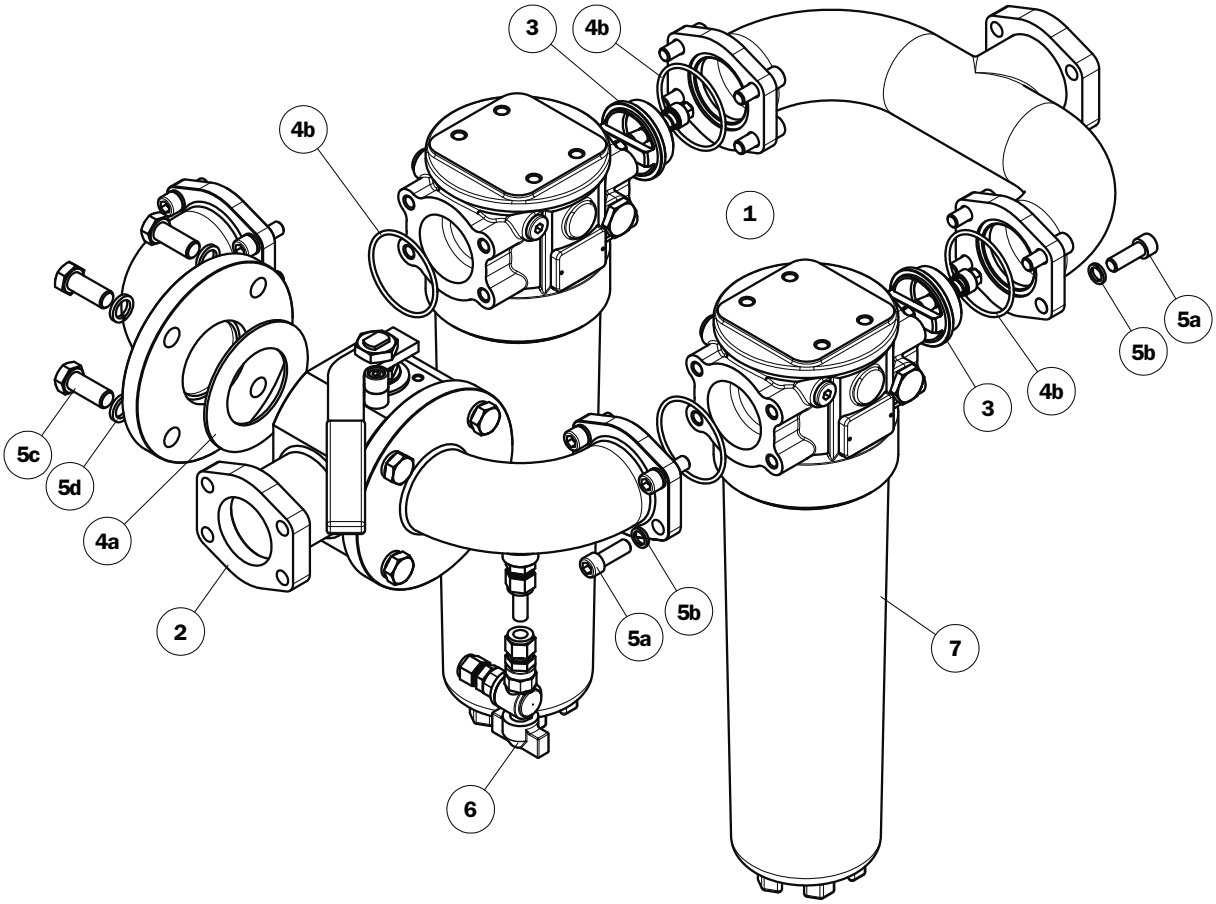

Pos.	Description	Qty	FILTER Series LMD 400
1	Filter assembly	1	See order table
2	3-way ball valve PN 16	1	2 1/2" SAE 3000 psi/M 02001440 2 1/2" SAE 3000 psi/UNC 02001441
3	One-way valve	2	02001429
4	Seals kit	1	02050399
4a	Flat seal	2	To DN 65
4b	IN-OUT O-Ring	4	O-R 4287
5	Threaded fasteners kit	1	02049062
5a	Allen screw	16	UNI 5931 - M12 x 35 - 10.9
5b	Circlips	16	UNI 1751-B 12
5c	Screw hexagon head	8	UNI EN 24017 - M16 x 40 - 10.9
5d	Circlips	8	UNI 1751-B 16
6	Kit ball valve with hose fitting	1	02025043
7	Filter	2	See order table LMP400xF2..... pag. 49
-	Indicators	2	See order table

LMD 401 spare parts

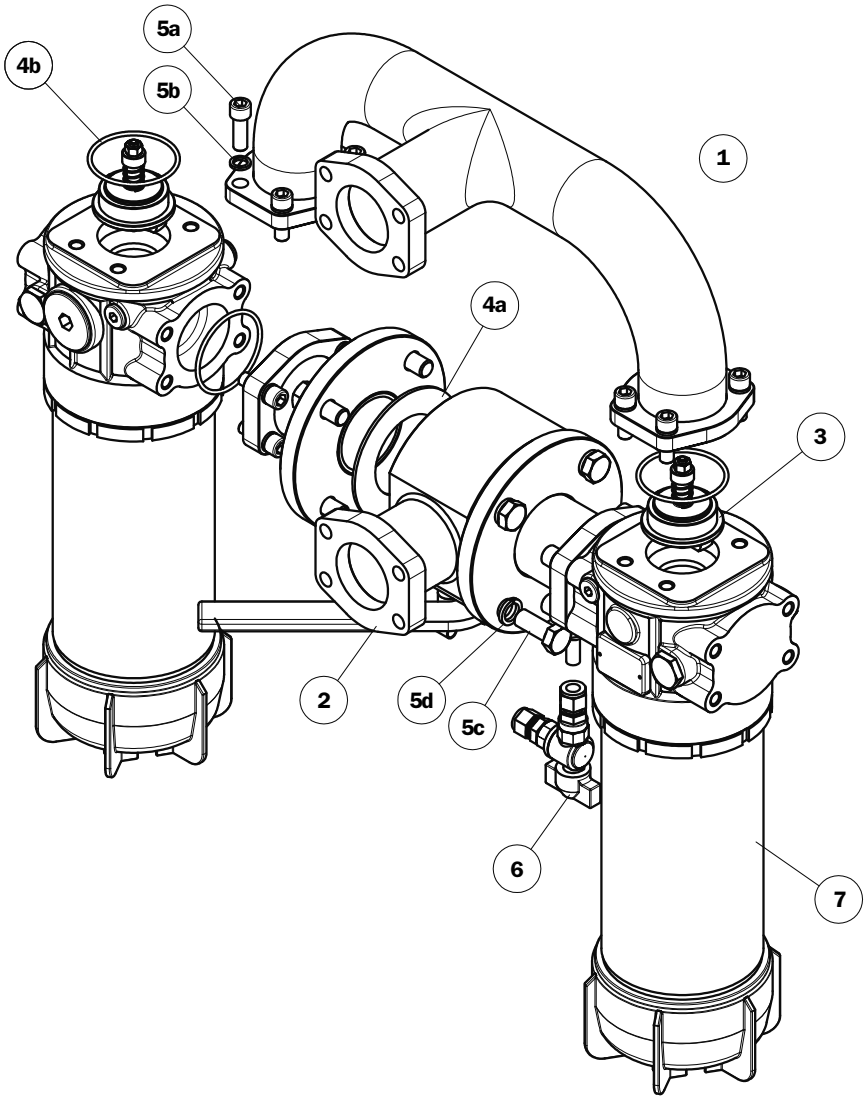

Pos.	Description	Qty	FILTER Series LMD 401
1	Filter assembly	1	See order table
2	3-way ball valve PN 16	1	2 1/2" SAE 3000 psi/M 02001440 2 1/2" SAE 3000 psi/UNC 02001441
3	One-way valve	2	02001429
4	Seals kit	1	02050399
4a	Flat seal	2	To DN 65
4b	IN-OUT O-Ring	4	O-R 4287
5	Mounting set accessories	1	02049062
5a	Allen screw	16	UNI 5931 - M12 x 35 - 10.9
5b	Circlips	16	UNI 1751-B 12
5c	Screw hexagon head	8	UNI EN 24017 - M16 x 40 - 10.9
5d	Circlips	8	UNI 1751-B 16
6	Kit ball valve with hose fitting	1	02025043
7	Filter	2	See order table LMP401xF2..... pag. 49
-	Indicators	2	See order table

LMD 431 spare parts

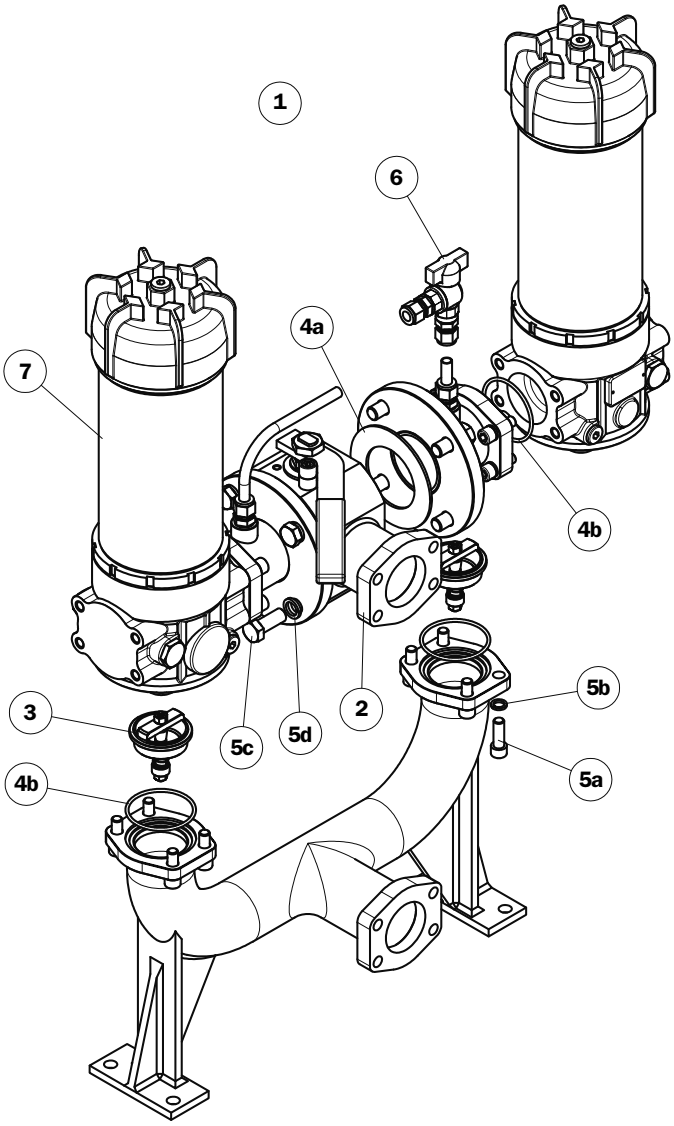

Pos.	Description	Qty	FILTER Series LMD 431
1	Filter assembly	1	See order table
2	3-way ball valve PN 16	1	2 1/2" SAE 3000 psi/M 02001440 2 1/2" SAE 3000 psi/UNC 02001441
3	One-way valve	2	02001429
4	Seals kit	1	02050399
4a	Flat seal	2	To DN 65
4b	IN-OUT O-Ring	4	O-R 4287
5	Threaded fasteners kit	1	02049062
5a	Allen screw	16	UNI 5931 - M12 x 35 - 10.9
5b	Circlips	16	UNI 1751-B 12
5c	Screw hexagon head	8	UNI EN 24017 - M16 x 40 - 10.9
5d	Circlips	8	UNI 1751-B 16
6	Kit ball valve with hose fitting	1	02025043
7	Filter	2	See order table LMP431xF2..... pag. 49
-	Indicators	2	See order table

LMD400/401/431 ordering information

Filter assembly **LMD**	1	2	3	4	5	6	7	8 a
	☐	☐	☐	☐	☐	☐	☐	☐
Example: LMD	400	5	B	V	F1	A10	N	P01

Filter Element **CU 400**	2	6	4	7	8 b
	☐	☐	☐	☐	☐
Example: CU400	5	A10	A	N	P01

1 - Sizes

- 400
- 401
- 431

2 - Filter length

- 4 — LMD 431 excluded
- 5
- 6

3 - Valves

- S — Without by-pass
- B — With by-pass

4 - Seals

a - Filter

- V — FPM

b - Filter elements

- A — NBR
- V — FPM (excluded series P10 and P25)

5 - Connections

Type

- F1 — 2 1/2" SAE 3000 psi/M
- F2 — 2 1/2" SAE 3000 psi/UNC
- F3 — = F1 In-line connections (only LMD 401 - 431)
- F4 — = F2 In-line connections (only LMD 401 - 431)

6 - Filter element

A03	3 µm	A16	16 µm	Absolute filtration Inorganic microfibre ßx (c) ≥ 1000 see page 9
A06	6 µm	A25	25 µm	
A10	10 µm			
M25	25 µm	M90	90 µm	Nominal Filtration Metal mesh see page 9
M60	60 µm			
P10	10 µm			Nominal Filtration Cellulose see page 9
P25	25 µm			

7 - Filter elements series

- N — Δp 20 bar
- W — Δp 20 bar (aqueous emulsions - water and glycol, not available for series P10 - P25 filter elements)

8 - Options

a - Filter

- P01 — MP Standard filters
- P02 — Maintenance from base of housing (only for length 5 - 6 / excluded LMD 431)
- P02 — LMD 431 With internal tube for reduced flow rate
- Pxx — Customer request

b - Filter elements

- P01 — MP Standard filters
- Pxx — Customer request

DIFFERENTIAL INDICATORS (see page 12)

MP Filtri - The filter functions as described in this bulletin are valid exclusively for original MP Filtri filter elements and replacement parts. All rights reserved

The data in this publication are purely guideline. MP Filtri reserves the right to make changes to the models described herein at any time it deems fit in relation to technical or commercial requirements. The colours of the products shown on the cover are purely guideline. Copyright. All rights reserved.